ADAM'S COMPUTER CONTROLLED BRAKING DIAGNOSTIC DISPLAY

MS DOS DIAGNOSTIC CODES WRITTEN BY ADAM NUGENT ROSENBERGER

APRIL 2, 2023

FOR TRIPLE CONTROL STAND LOCOMOTIVES

FIGURE 1-5 CCB CONFIGURATION

TRIPLE CONTROL STAND COMPUTER CONTROLLED BRAKING CONFIGURATION

Diagnostic Code 10(Air Brake Self-test):

AIR BRAKE SELF TEST

CHECK DRIVER

C><LOCOMOTIVESPEEDSENSOR><VALUE=0MPH>

C><HANDBRAKE><APPLIED>

C><LOCOMOTIVE><ISOLATED> = = <LEAD CUT IN MODE>

C><CONTROLLER*.SYS.EXE><SELECTED>

C>ACTIVE <BRAKEVALVEHANDLES> = = <RUN/RELEASE>

C>INACTIVE<CONTOLLER.SYS> = = <BRAKEVALVEHANDLE=VALUE FULL SERVICE>

C>MAINRESERVIOR<PRESSURE<102 PSI(7 BAR)>

C>BRAKECYLINDER< EXHAUSTED>

C> BRAKEPIPE<FULLY CHARGED>

C> BRAKEPIPE.SYS<VALUELESSTHAN >FULLY CHARGED> == <AIRBRAKESELFTEST.EXE>

THEN

LOADHIGH <BRAKEPIPE.SYS.EXE><STAY RESIDENT>

C><AIRBRAKETEST.EXE><PASS> = = <ERRORCODE*.*.CLR>

C>AIRBRAKETEST.EXE><FAIL> = = <EMERGENCY.SYS.EXE><ACTIVATE>

THEN

C>EMERGENCYE.EXE.<RESET Y/N?>

C>AUTOMATICBRAKEVALVE<EMERGENCY> = = <DURATION:60SECONDS> /W

C>AUTOMATICBRAKEVALVE<RUN/RELEASE>

EMERGENCY.SYS.CONFIG

AUTOMATICBRAKEVALVE=C:\AUTOMATICBRAKEVALVE\AUTOMATICEBRAKEVALVE.SYS

AUTOMATICBRAKEVALVE=C:\AUTOMATICBRAKEVALVE\AUTOMATICEBRAKEVALVE.SYS<RELEASE\ RUNNING\ LAP\ APPLICATION\EMERGENCY>

1.2.1 SYSTEM OPERATING PRESSURES

A. AUTOMATIC BRAKE PRESSURES – WDG4/WDP4 & Alco Locomotive
Main Reservoir = 8 - 10 kg/cm2. = 113.787 PSI -142.233 PSI
Release - BP= 5.7 kg/cm2 +/- 0.1 kg/cm2 Max for WDG4/WDP4 Loco and 5.5 kg/cm2 +/- 0.1 kg/cm2 Max for Alco Loco

RELEASE -BP=81.1281PSI +/- 1.42233PSI ,MAX FOR WDG4/WDP4 AND 78.22815PSI +/- 1.42233 MAX FOR ALCO LOCO

Running - ER and BP = 5.2 kg/cm2 +/- 0.1 kg/cm2 for WDG4/WDP4 Loco and 5.0 kg/cm2 for Alco Loco, BC = 0

RUNNING -ER AND BP = 73.96116PSI +/- 1.42233 PSI FOR WDG4/WDP4 LOCO AND 71.1167PSI ALCO BC =0

Minimum Service - ER/ BP reduce to 4.7 kg/cm2 +/- 0.1 kg/cm2, BC = 0.3-0.4kg/cm2+/- 0.1 kg/cm2.

MINIMUM SERVICE -ER/BP REDUCE 66.850PSI +/- 1.42233PSI BC= 4.3-5.7PSI +/- 1.42233PSI

Full Service - ER/BP reduce to 3.4 kg/cm2+/- 0.1 kg/cm2, BC = 1.82kg/cm2+/- 0.1 kg/cm2.

FULL SERVICE -ER/BP REDUCE TO 45.5PSI +/- 1.42233PSI, BC = 25.89PSI +/- 1.42233PSI

Emergency - ER reduces to 0 kg/cm2, BC = 1.82kg/cm2+/- 0.1 kg/cm2.

EMERGENCY - ER REDUCES TO 0PSI, BC = 25.9PSI +/- 1.42233 PSI

BP reduces to less than 1 kg/cm2.

BP REDUCES TO LESS THAN 14.2233PSI

BCEP = 1.82 kg/cm2+/- 0.1 kg/cm2.

BCEP = 25.87PSI +/- 1.42233

DIRECT BRAKE
A. FOR WDG4 & WDP4 Locomotive
Direct Brake = Maximum brake position BC = 5.2 kg/cm_2+/- 0.1 kg/cm_2.

Direct Brake = Maximum brake position BC = 73.9PSI +/- 1.42233PSI

BCEP = 5.2 kg/cm_2+/- 0.1 kg/cm_2.

BCEP = 73.9PSI +/- 1.42233PSI

Release Position BC = 0 kg/cm_2

RELEASE POSITION BC = 0PSI

B. FOR ALCO Locomotive
Direct Brake = Maximum brake position BC = 3.5 kg/cm_2+/- 0.1 kg/cm_2.

Direct Brake = Maximum brake position BC = 49.78PSI +/- 1.42233PSI.

BCEP = 3.5 kg/cm_2+/- 0.1 kg/cm_2.

BCEP= 49.78PSI+/-1.42233PSI

Release Position BC = 0 kg/cm_2

RELEASE POSITION BC = 0 PSI

kg/cm² to psi Conversion Table

The calculation below shows how kilograms per square centimetre are converted into pounds per square inch by converting each into pascals (SI units for pressure):

1 psi = 6,894.76 pascals (Pa)

1 kg/cm² = 98066.5 pascals (Pa)

psi value x 6,894.76 Pa = kg/cm2 value x 98066.5 Pa

psi value = kg/cm2 value x 14.2233

```
GOTO FAULTBIN
c>FAULTBIN.BAT
c:\FAULTBIN>
STORE
the time is<SPACE>$t$_the date is<space>$d$
C:\FAULTBIN>ADD TO FAULTBIN DIRECTORY?<SPACE><ENTER>
C:AUTOERRORCODE.EXE> ERRORCODE.BAT> COPY (FAULT CODE).DOC TO FAULTBIN.BAT
C:AUTOERRORCODE.EXE> COPY ERRORCODE.BAT FAULT CODE .DOC
C:AUTOERRORCODE.EXE> COPY ERRORCODE.DOC FAULTBIN.BAT /V
c:\FAULTBIN>DISPLAY ERRORCODE ENTRIES?<SPACE><ENTER>
c:\FAULTBNIN>DIR ERRORCODE*
c:\FAULBIN> PRINT FAULTBIN?<SPACE><ENTER>
c:\FAULTBIN.BAT PRN

c:FAULTBIN.EXE/clear screen Y/N?
```

Diagnostic Code 10(Air Brake Self-test):

AIR BRAKE SELF TEST

CHECK DRIVER

C><LOCOMOTIVESPEEDSENSOR><VALUE=0MPH>

C><HANDBRAKE><APPLIED>

C><LOCOMOTIVE><ISOLATED> = = <LEAD CUT IN MODE>

C><CONTROLLER*.SYS.EXE><SELECTED>

C>ACTIVE <BRAKEVALVEHANDLES> = = <RUN/RELEASE>

C>INACTIVE<CONTOLLER.SYS> = = <BRAKEVALVEHANDLE=VALUE FULL SERVICE>

C>MAINRESERVIOR<PRESSURE<102 PSI(7 BAR)>

C>BRAKECYLINDER< EXHAUSTED>

C> BRAKEPIPE<FULLY CHARGED>

C> BRAKEPIPE.SYS<VALUELESSTHAN >FULLY CHARGED> == <AIRBRAKESELFTEST.EXE>

THEN

LOADHIGH <BRAKEPIPE.SYS.EXE><STAY RESIDENT>

C><AIRBRAKETEST.EXE><PASS> = = <ERRORCODE*.*.CLR>

C>AIRBRAKETEST.EXE><FAIL> = = <EMERGENCY.SYS.EXE><ACTIVATE>

THEN

C>EMERGENCYE.EXE.<RESET Y/N?>

C>AUTOMATICBRAKEVALVE<EMERGENCY> = = <DURATION:60SECONDS> /W

C>AUTOMATICBRAKEVALVE<RUN/RELEASE>

EMERGENCY.SYS.CONFIG

AUTOMATICBRAKEVALVE=C:\AUTOMATICBRAKEVALVE\AUTOMATICEBRAKEVALVE.SYS

AUTOMATICBRAKEVALVE=C:\AUTOMATICBRAKEVALVE\AUTOMATICEBRAKEVALVE.SYS<RELEASE\ RUNNING\ LAP\ APPLICATION\EMERGENCY>

1.2.1 SYSTEM OPERATING PRESSURES

A. AUTOMATIC BRAKE PRESSURES – WDG4/WDP4 & Alco Locomotive
Main Reservoir = 8 - 10 kg/cm2. = 113.787 PSI -142.233 PSI
Release - BP= 5.7 kg/cm2 +/- 0.1 kg/cm2 Max for WDG4/WDP4 Loco and 5.5 kg/cm2 +/- 0.1 kg/cm2 Max for Alco Loco

RELEASE -BP=81.1281PSI +/- 1.42233PSI ,MAX FOR WDG4/WDP4 AND 78.22815PSI +/- 1.42233 MAX FOR ALCO LOCO

Running - ER and BP = 5.2 kg/cm2 +/- 0.1 kg/cm2 for WDG4/WDP4 Loco and 5.0 kg/cm2 for Alco Loco, BC = 0

RUNNING -ER AND BP = 73.96116PSI +/- 1.42233 PSI FOR WDG4/WDP4 LOCO AND 71.1167PSI ALCO BC =0

Minimum Service - ER/ BP reduce to 4.7 kg/cm2 +/- 0.1 kg/cm2, BC = 0.3-0.4kg/cm2+/- 0.1 kg/cm2.

MINIMUM SERVICE -ER/BP REDUCE 66.850PSI +/- 1.42233PSI BC= 4.3-5.7PSI +/- 1.42233PSI

Full Service - ER/BP reduce to 3.4 kg/cm2+/- 0.1 kg/cm2, BC = 1.82kg/cm2+/- 0.1 kg/cm2.

FULL SERVICE -ER/BP REDUCE TO 45.5PSI +/- 1.42233PSI, BC = 25.89PSI +/- 1.42233PSI

Emergency - ER reduces to 0 kg/cm2, BC = 1.82kg/cm2+/- 0.1 kg/cm2.

EMERGENCY - ER REDUCES TO 0PSI, BC = 25.9PSI +/- 1.42233 PSI

BP reduces to less than 1 kg/cm2.

BP REDUCES TO LESS THAN 14.2233PSI

BCEP = 1.82 kg/cm2+/- 0.1 kg/cm2.

BCEP = 25.87PSI +/- 1.42233

DIRECT BRAKE
A. FOR WDG4 & WDP4 Locomotive
Direct Brake = Maximum brake position BC = 5.2 kg/cm_2+/- 0.1 kg/cm_2.

Direct Brake = Maximum brake position BC = 73.9PSI +/- 1.42233PSI

BCEP = 5.2 kg/cm_2+/- 0.1 kg/cm_2.

BCEP = 73.9PSI +/- 1.42233PSI

Release Position BC = 0 kg/cm_2

RELEASE POSITION BC = 0PSI

B. FOR ALCO Locomotive
Direct Brake = Maximum brake position BC = 3.5 kg/cm_2+/- 0.1 kg/cm_2.

Direct Brake = Maximum brake position BC = 49.78PSI +/- 1.42233PSI.

BCEP = 3.5 kg/cm_2+/- 0.1 kg/cm_2.

BCEP= 49.78PSI+/-1.42233PSI

Release Position BC = 0 kg/cm_2

RELEASE POSITION BC = 0 PSI

kg/cm² to psi Conversion Table

The calculation below shows how kilograms per square centimetre are converted into pounds per square inch by converting each into pascals (SI units for pressure):

1 psi = 6,894.76 pascals (Pa)

1 kg/cm² = 98066.5 pascals (Pa)

psi value x 6,894.76 Pa = kg/cm2 value x 98066.5 Pa

psi value = kg/cm2 value x 14.2233

Diagnostic Code 20(No C1 Controller):

C:\CCB.EXE

CCB.CONFIG.SYS<ON>

AIRBRAKESELFTEST.EXE<CHECKDRIVER>

CONTROLLER1.SYS<ON/OFF> ON

C> <INDEPENDENTHANDLE><FREQUENCY GREATER THAN 100HZ> = = <AUTOMATICHANDLE><FREQUENCY GREATER THAN 100HZ>

CONTROLLER1.SYS<FUNCTIONING>

C> IF <INDEPENDENTHANDLE><FREQUENCY LESS THAN 100HZ> = = <AUTOMATICHANDLE><FREQUENCY LESS THAN 100HZ>

THEN

c> CONTOLLER1.SYS<MALFUNCTION>WARNING!!! CONTROLLER NUMBER FLAGGED MISSING!!! <SPACE><ENTER>

ERRORCODEdiagnosticcode20\NOCONTROLLER1.BAT

C:\ERRORCODEdiagnosticcode20\NOCONTROLLER1.BAT

c:\ERRORCODEdiagnosticcode20\NOC1CONTROLLER1.SYS IF <INDEPENDENT HANDLE><FREQUENCY LESS THAN 100HZ> = = <AUTOMATIC HANDLE><FREQUENCY LESS THAN 100HZ>!!!WARNING NO CONTROLLER NUMBER 1!!!<SPACE><ENTER>

C:AUTOERRORCODE.EXE COPY

ERRORCODEdiagnosticcode20\NOCONTROLLER1.BAT FAULTCODE20.COM

C:AUTOERRORCODE.EXE COPY

ERRORCODEdiagnosticcode20\NOCONTROLLER1.BAT FAULTBIN.BAT /V

THE TIME IS <SPACE>T_THE DATE IS <SPACE>D

C:\TROUBLESHOOT.EXE\Diagnostic Code 20_No C1 Controller.TXT<OPEN TEXT VIEWER Y/N>

C>CCB.EXE\CONTROLLER1.SYS

C> CONTROLLER1.SYS<RESET> CHECK DRIVER AIRBRAKESELFTEST.EXE

C:\TROUBLESHOOT.EXE\Diagnostic Code 20_No C1 Controller.TXT

C> <FUALTCODE20><CLEAR> = = <AIRBRAKESELFTEST><PASS>

CCB.SYS.CONFIG<DEFAULT

CONTROLLERN01.SYS<DEFAULT>

THEN

LEADTRAILSWITCH1=c:\LEAD/TRAILSWITCH1\LEAD/TRAILSWITCH1.SYS<TRAIL>

AUTOMATICEMERGENCYSWITCH1=C:\AUTOMATICEMERGENCYSWITCH1.SYS<CLOSED>

C><LEAD/TRAILSWITCH1.SYS<DEEFAULT> AIR BRAKE FAILURE- USE LOCOMOTIVE IN TRAIL ONLY<SPACE><ENTER>

C> CCB.SYS<CONTROLLERNNO2> <SELECTED> AIR BRAKE CONTROLLER NUMBER 1 FAILURE - SWITCH TO AIR BRAKE CONTROLLER NUMBER 2<SPACE><ENTER>

OR

C>CCB.SYS<CONTROLLERNNO3> <SELECTED> AIR BRAKE CONTROLLER NUMBER 1 FAILURE - SWITCH TO AIR BRAKE CONTROLLER NUMBER 3<SPACE><ENTER>

C>CCB.SYS<CONTROLLERNO2><INOPERATIVE> = = <CONTROLLERNO3><INOPERATIVE>

THEN

C><LEAD/TRAILSWITCH1.SYS<DEEFAULT> AIR BRAKE FAILURE- USE LOCOMOTIVE IN TRAIL ONLY<SPACE><ENTER>

CONTROLLER2.SYS.<ON/OFF>

CONTROLLER3.SYS<ON/OFF>

NO C1 CONTROLLER DEFAULT CODE 20

C>CCB.SYS<ON>= = <CONTROLLER1.SYS>

Diagnostic Code 21(C1 Automatic Handle Frequency Low):

C:\CCB.EXE

CCB.CONFIG.SYS<ON>

AIRBRAKESELFTEST.EXE<CHECKDRIVER>

CONTROLLER1.SYS<ON/OFF> ON

C>CUTOUTRELAYS.SYS

C1AUTOMATICHANDLEFREQUENCYLOW.BAT

C> IF CONTROLLER1<AUTOMATICHANDLE.SYS><FREQUENCY LESS THAN 808HZ>!!!WARNING!!! CONTROLLER NUMBER 1 AUTOMATIC HANDLE FREQUENCY LOW!!!<SPACE><ENTER>

THEN

C> CONTROLLER1<AUTOMATICHANDLE.SYS><FREQUENCY LESS THAN 808HZ> = = <CUTOUTRELAY.SYS><PENALTYAPPLICATION>

C>CONTROLLER1<AUTOMATICHANDLE.SYS><FREQUENCY LESS THAN 808HZ> = = <BRAKEPIPE.SYS><EXHUAST SERVICE APPLICATION RATE>

ERRORCODEdiagnosticcode21\C1AUTOMATICHANDLEFREQUENCYLOW.BAT

C:AUTOERRORCODE.EXE COPY

C:ERRORCODEdiagnosticcode21\C1AUTOMATICHANDLEFREQUENCYLOW.BAT FAULTCODE1.COM

C:ERRORCODEdiagnosticcode21\C1AUTOMATICHANDLEFREQUENCYLOW.BAT FAULTCODE1.COM

FAULTCODE 1 = FAULTY CONTROLLER

C:ERRORCODEdiagnosticcode21\C1AUTOMATICHANDLEFREQUENCYLOW.BAT FAULTCODE2.COM

FAULTCODE 2 = FAULTY WIRING

C:AUTOERRORCODE.EXE COPY

C:ERRORCODEdiagnosticcode21\C1AUTOMATICHANDLEFREQUENCYLOW.BAT FAULTBIN.BAT /V

THE TIME IS <SPACE>t_THE DATE IS <SPACE>d

C:\TROUBLESHOOT.EXE\Diagnostic Code 21_No C1 Controller.TXT<OPEN TEXT VIEWER Y/N>

C>FAULTCODE1.COM<CONTROLLER1.SYS\AUTOMATICHANDLE><INCORRECTPOSITION

C>FAULTCODE2.CON<DEENERGIZED>!!!WARNING!!! DISCONNECTED OR DAMAGED FIBER OBTIC CABLE!!! <SPACE><ENTER>

C>CCB.SYS<CONTROLLERNO2><SELECTED>AIR BRAKE CONTROLLER NUMBER 1 FAILURE - SWTICH TO CONTROLLER NUMBER 2<SPACE><ENTER> Y/N

OR

C>CCB.SYS<CONTROLLERNO3><SELECTED>AIR BRAKE CONTROLLER NUMBER 1 FAILURE - SWTICH TO CONTROLLER NUMBER 3<SPACE><ENTER> Y/N

C>CCB.EXE\CONTROLLER1.SYS

C> CONTROLLER1.SYS<RESET> CHECK DRIVER AIRBRAKESELFTEST.EXE

C:\TROUBLESHOOT.EXE\Diagnostic Code 21_No C1 Controller.TXT<OPEN TEXT VIEWER Y/N>

C> <FUALTCODE21><CLEAR> = = <AIRBRAKESELFTEST><PASS>

Diagnostic Code 22(C1 Automatic Handle Frequency High):

C:\CCB.EXE

CCB.CONFIG.SYS<ON>

AIRBRAKESELFTEST.EXE<CHECKDRIVER>

CONTROLLER1.SYS<ON/OFF> ON

C>CUTOUTRELAYS.SYS

C1AUTOMATICHANDLEFREQUENCYHIGH.BAT

C> IF CONTROLLER1<AUTOMATICHANDLE.SYS><FREQUENCY GREATER THAN 11392HZ>!!!WARNING!!! CONTROLLER NUMBER 1 AUTOMATIC HANDLE FREQUENCY HIGH!!!<SPACE><ENTER>

THEN

C> CONTROLLER1<AUTOMATICHANDLE.SYS><FREQUENCY GREATER THAN 11392HZ> = = <CUTOUTRELAY.SYS><PENALTYAPPLICATION>

C>CONTROLLER1<AUTOMATICHANDLE.SYS><FREQUENCY GREATER THAN 11392HZ> = = <BRAKEPIPE.SYS><EXHUAST SERVICE APPLICATION RATE>

C:ERRORCODEdiagnosticcode22\C1AUTOMATICHANDLEFREQUENCYHIGH.BAT FAULTCODE1.COM

C:ERRORCODEdiagnosticcode22\C1AUTOMATICHANDLEFREQUENCYHIGH.BAT FAULTBIN.BAT /V

THE TIME IS <SPACE>t_THE DATE IS <SPACE>d

C:\TROUBLESHOOT.EXE\Diagnostic Code 22_No C1 Controller.TXT<OPEN TEXT VIEWER Y/N>

C>CCB.SYS<CONTROLLERNO2><SELECTED>AIR BRAKE CONTROLLER NUMBER 1 FAILURE - SWTICH TO CONTROLLER NUMBER 2<SPACE><ENTER>

OR

C>CCB.SYS<CONTROLLERNO3><SELECTED>AIR BRAKE CONTROLLER NUMBER 1 FAILURE - SWTICH TO CONTROLLER NUMBER 3<SPACE><ENTER>

C> C1AUTOMATICHANDLEFREQUENCYHIGH.BAT<RETURNING TO CONTROLLER NUMBER 1> = = <RESULT PENALTY BRAKE APPLICATION>

C>CCB.EXE\CONTROLLER1.SYS

C> CONTROLLER1.SYS<RESET> CHECK DRIVER AIRBRAKESELFTEST.EXE

C:\TROUBLESHOOT.EXE\Diagnostic Code 22_No C1 Controller.TXT <OPEN TEXT VIEWER Y/N>

C> <FUALTCODE22><CLEAR> = = <AIRBRAKESELFTEST><PASS>

Diagnostic Code 23(C1 Automatic Release Switch Stuck Open)

AUTOMATICRELEASESWITCH.SYS

C1AUTOMATICBRAKE=C:\C1AUTMATICBRAKE.SYS

C1AUTOMATICRELEASESWITCH1=C:\C1AUTOMATICRELEASESWITHC1.SYS<RELEASE>

DELAYCOUNTER=C:\DELAYCOUNTER.SYS

C1AUTOMATICRELEASESWITCHSTUCKOPEN.BAT

C>IF <C1AUTOMATICRELEASESWITCH ><OPEN> = = <C1AUTOMATICHANDLE><RELEASE>!!!WARNING AUTOMATIC RELEASE SWITCH STUCK OPEN!!!<SPACE><ENTER>

C><C1AUTOMATICRELEASESWITCH><OPEN> = = <DELEAYCOUNTER.SYS<GREATER THAN 2SECONDS> !!!WARNING AUTOMATIC RELEASE SWITCH STUCK OPEN!!! <SPACE><ENTER>

C><C1AUTOMATICBRAKE.SYS><GREATER THAN 11000HZ> = = <C1AUTOMATICRELEASESWITCH<OPEN>!!!WARNING AUTOMATIC RELEASE SWITCH STUCK OPEN!!!<SPACE><ENTER>

ERRORCODEdiagnosticcode23\C1AUTOMATICRELEASESWITCHSTUCKOPEN.BAT

C:ERRORCODEdiagnosticcode23\C1AUTOMATICRELEASESWITCHSTUCKOPEN.BAT

C:AUTOERRORCODE.EXE COPY

C:ERRORCODEdiagnosticcode23\C1AUTOMATICRELEASESWITCHSTUCKOPEN.BAT FAULTCOD1.COM

C:AUTOERRORCODE.EXE COPY

C:ERRORCODEdiagnosticcode23\C1AUTOMATICRELEASESWITCHSTUCKOPEN.BAT FAULTBIN.BAT /V

THE TIME IS <SPACE>t_THE DATE IS <SPACE>d

C>CCB.SYS<CONTROLLERNO2><SELECTED>AIR BRAKE CONTROLLER NUMBER 1 FAILURE - SWTICH TO CONTROLLER NUMBER 2<SPACE><ENTER>

OR

C>CCB.SYS<CONTROLLERNO3><SELECTED>AIR BRAKE CONTROLLER NUMBER 1 FAILURE - SWTICH TO CONTROLLER NUMBER 3<SPACE><ENTER>

C:\TROUBLESHOOT.EXE\Diagnostic Code 23_No C1 Controller.TXT<OPEN TEXT VIEWER Y/N>

C> <FUALTCODE23><CLEAR> = = <C1AUTOMATICHANDLE><RELEASE>

THEN

C> AUTOMATICRELEASESWITCH.SYS<CLOSED>

Diagnostic Code 24(C1 Automatic Release Switch Stuck Closed):

AUTOMATICRELEASESWITCH.SYS

C1AUTOMATICBRAKE=C:\C1AUTMATICBRAKE.SYS

C1AUTOMATICRELEASESWITCH1=C:\C1AUTOMATICRELEASESWITHC1.SYS<RELEASE>

DELAYCOUNTER=C:\DELAYCOUNTER.SYS

C1AUTOMATICRELEASESWITCHSTUCKCLOSED.BAT

C>IF <C1AUTOMATICRELEASESWITCH ><OPEN> = = <C1AUTOMATICHANDLE><RELEASE>!!!WARNING AUTOMATIC RELEASE SWITCH STUCK OPEN!!!<SPACE><ENTER>

C> IF <C1AUTOMATICRELEASESWITCH><OPEN> = = <DELEAYCOUNTER.SYS<GREATER THAN 2SECONDS> !!!WARNING AUTOMATIC RELEASE SWITCH STUCK OPEN!!!<SPACE><ENTER>

C> IF<C1AUTOMATICBRAKE.SYS><GREATER THAN 11000HZ> = = <C1AUTOMATICRELEASESWITCH<OPEN>!!!WARNING AUTOMATIC RELEASE SWITCH STUCK OPEN!!!<SPACE><ENTER>

THEN

C>IF<C1AUTOMATICBRAKE.SYS><LESS THAN 10508HZ> = = <C1AUTOMATICRELEASESWITCH<CLOSED>!!!WARNING AUTOMATIC RELEASE SWITCH STUCK CLOSED!!!<SPACE><ENTER>

C><C1AUTOMATICBRAKERELEASWITCH>CLOSED>

C1AUTOMATICRELEASESWITCHSTUCKCLOSED.BAT

ERRORCODEdiagnosticcode24\C1AUTOMATICRELEASESWITCHSTUCKCLOSED.BAT

C:ERRORCODEdiagnosticcode24\C1AUTOMATICRELEASESWITCHSTUCKCLOSED.BAT

C:AUTOERRORCODE.EXE COPY

C:ERRORCODEdiagnosticcode24\C1AUTOMATICRELEASESWITCHSTUCKCLOSED.BA

T FAULTCOD1.COM

C:AUTOERRORCODE.EXE COPY

C:ERRORCODEdiagnosticcode24\C1AUTOMATICRELEASESWITCHSTUCKCLOSED.BA
T FAULTBIN.BAT /V

THE TIME IS <SPACE>t_THE DATE IS <SPACE>d

C>CCB.SYS<CONTROLLERNO2><SELECTED>AIR BRAKE CONTROLLER NUMBER 1 FAILURE - SWTICH TO CONTROLLER NUMBER 2<SPACE><ENTER>

OR

C>CCB.SYS<CONTROLLERNO3><SELECTED>AIR BRAKE CONTROLLER NUMBER 1 FAILURE - SWTICH TO CONTROLLER NUMBER 3<SPACE><ENTER>

C:\TROUBLESHOOT.EXE\Diagnostic Code 24_No C1 Controller.TXT<OPEN TEXT VIEWER Y/N>

CLEAR FAULT

C> <FUALTCODE24><CLEAR> = = <C1AUTOMATICHANDLE><RELEASE>

THEN

C> AUTOMATICRELEASESWITCH.SYS<OPEN>

Diagnostic Code 25(C1 Automatic Emergency Switch Stuck Open):

C:\CCB.EXE

CCB.CONFIG.SYS.ON

AUTOEMERGENCYSWITCH1.SYS

C1CONTROLLER.SYS.SYS

C1AUTOMATICHANDLE.SYS

DELAYCOUNTER.SYS

CUTOUTRELAY.SYS

BRAKEPIPES.YS

C1AUTOMATICEMERGENCYSWITCHSTUCKOPEN.BAT

C>IF CONTROLLER1<C1AUTOMATICHANDLE><FREQUENCY GREATER THAN 1692 HZ> = = <AUTOMATICEMERGENCYSWITCH1><OPEN>

C>IF CONTROLLER1<C1AUTOMATICHANDLE><FREQUENCY GREATER THAN 1692 HZ> = = <DELAY COUNTER><2SECONDS>

C>CONTROLLER1<C1AUTOMATICHANDLE><EMERGENCY BRAKE APPLICATION>= =<CUT OUT RELAY><OUT>

C>CONTROLLER1<C1AUTOMATICHANDLE><EMERGENCY BRAKE APPLICATION>= <BRAKEPIPE.SYS><REDUCED TO ZERO PSI>

THEN

C><AUTOMATICEMERGNCYSWTICH1><REMAINS OPEN>!!!WARNING AUTOMATIC EMERGENCY SWITCH STUCK OPEN!!!<SPACE><ENTER>

ERRORCODEdiagnosticcode25

C1AUTOMATICEMERGENCYSWITCHSTUCKOPEN.BAT

C:\AUTOERRORCODE.EXE COPY

C:ERRORCODEdiagnostic code25\C1AUTOMATICEMERGENCYSWITCHSTUCKOPEN.BAT FAULTCODE1.COM

C:\AUTOERRORCODE.EXE COPY

C:ERRORCODEdiagnostic code25\C1AUTOMATICEMERGENCYSWITCHSTUCKOPEN.BAT FAULTBIN.BAT /V

THE TIME IS <SPACE>t_THE DATE IS <SPACE>d

C:\TROUBLESHOOT.EXE\Diagnostic Code 25_No C1 Controller.TXT<OPEN TEXT VIEWER Y/N>

C>CCB.SYS<CONTROLLERNO2><SELECTED>AIR BRAKE CONTROLLER NUMBER 1 FAILURE - SWTICH TO CONTROLLER NUMBER 2<SPACE><ENTER> Y/N

OR

C>CCB.SYS<CONTROLLERNO3><SELECTED>AIR BRAKE CONTROLLER NUMBER 1 FAILURE - SWTICH TO CONTROLLER NUMBER 3<SPACE><ENTER> Y/N

C> FUALTCODE25<CLEAR> IF <CONTROLLERNUMBER1><ACTIVE> = = <AUTOEMERGENCYSWITCH1<CLOSED>

C>RESET <EMERGENCY BRAKE APPLICATION>

C><AUTOMATICEMERGENCYSWTICH1.SYS><CLOSED>

C>IF <C1AUTOMATICHANDLE><NOT IN EMERGENCY POSITION>

Diagnostic Code 26(C1 Automatic Emergency Switch Stuck Closed):

C:\CCB.EXE

CCB.CONFIG.SYS.ON

AUTOEMERGENCYSWITCH1.SYS

C1CONTROLLER.SYS.SYS

C1AUTOMATICHANDLE.SYS

DELAYCOUNTER.SYS

CUTOUTRELAY.SYS

BRAKEPIPES.SYS

C1AUTOMATICEMERGENCYSWITCHSTUCKCLOSED.BAT

C>IF CONTROLLER1<C1AUTOMATICHANDLE><FREQUENCY BELOW 1200 HZ> = = <AUTOMATICEMERGENCYSWITCH1><CLOSED>

C>IF CONTROLLER1<C1AUTOMATICHANDLE><FREQUENCY BELOW 1200 HZ> = = <DELAY COUNTER><2SECONDS>

THEN

C><AUTOMATICEMERGNCYSWTICH1><REMAINS OPEN>!!!WARNING AUTOMATIC EMERGENCY SWITCH STUCK CLOSED!!!<SPACE><ENTER>

ERRORCODEdiagnosticcode26

C1AUTOMATICEMERGENCYSWITCHSTUCKCLOSED.BAT

C:\AUTOERRORCODE.EXE COPY

C:\ERRORCODEdiagnosticcode26\C1AUTOMATICEMERGENCYSWITCHSTUCKCLOSED.BAT

C:\AUTOERRORCODE.EXE COPY

C:\ERRORCODEdiagnosticcode26\C1AUTOMATICEMERGENCYSWITCHSTUCKCLOSE

D.BAT FAULTCODE1.COM

C:\AUTOERRORCODE.EXE COPY

C:ERRORCODEdiagnostic code26\C1AUTOMATICEMERGENCYSWITCHSTUCKCLOSED.BAT FAULTBIN.BAT /V

THE TIME IS <SPACE>t_THE DATE IS <SPACE>d

C:\TROUBLESHOOT.EXE\Diagnostic Code 26_No C1 Controller.TXT<OPEN TEXT VIEWER Y/N>

C>CCB.SYS<CONTROLLERNO2><SELECTED>AIR BRAKE CONTROLLER NUMBER 1 FAILURE - SWTICH TO CONTROLLER NUMBER 2<SPACE><ENTER> = = <FAULTCODE26><CLEAR>

OR

C>CCB.SYS<CONTROLLERNO3><SELECTED>AIR BRAKE CONTROLLER NUMBER 1 FAILURE - SWTICH TO CONTROLLER NUMBER 3<SPACE><ENTER> = = <FAULTCODE26><CLEAR>

C:CONTROLLERNUMBER1.SYS<C1AUTOMATICHANDLE><EMERGENCYPOSITION> = = <AUTOEMERGENCYSWITCH><OPEN>

THEN

C:\C1AUTOMATICEMERGENCYSWITCHSTUCKCLOSED.EXE <FAULT CLEAR\RESET>

Diagnostic Code 27(C1 Independent Handle Frequency Low):

CCB.EXE

CCB.CONFIG.SYS<ON>

AIRBRAKESELFTEST.EXE<CHECKDRIVER>

CONTROLLER1.SYS<ON/OFF> ON

C1INDEPENENTHANDLE.SYS<RELEASE POSITION> = = <OPERATIONAL>

C1INDEPENDENTHANDLEFREQUENCYLOW.BAT

C><C1INDEPENDENTHANDLE.SYS><BELOW 2729 HZ> !!!WARNING-AIR BRAKE FAILURE - GRADUATED INDEPENDENT BRAKING IS NOT AVAILABLE!!!

C>><C1INDEPENDENTHANDLE.SYS><BELOW 2729 HZ> = = <INDEPENDENTBRAKES><FULL APPLIED>

C1INDEPENDENTHANDLEFREQUENCYLOW.BAT

ERRORCODEdiagnosticcode27/C1INDEPENDENTHANDLEFREQUENCYLOW.BAT

C:C1INDEPENDENTHANDLEFREQUENCYLOW.BAT

C:AUTOERRORCODE.EXE COPY

C:/ERRORCODEdiagnosticcode27/C1INDEPENDENTHANDLEFREQUENCYLOW.BAT FAULTCODE1.COM

C:/ERRORCODEdiagnosticcode27/C1INDEPENDENTHANDLEFREQUENCYLOW.BAT FAULTCODE2.COM

C:/ERRORCODEdiagnosticcode27/C1INDEPENDENTHANDLEFREQUENCYLOW.BAT FAULTBIN.BAT /V

THE TIME IS <SPACE>t_THE DATE IS <SPACE>d

C:\TROUBLESHOOT.EXE\Diagnostic Code 27_No C1 Controller.TXT<OPEN TEXT VIEWER Y/N>

C>CCB.SYS<CONTROLLERNO2><SELECTED>AIR BRAKE CONTROLLER NUMBER 1 FAILURE - SWTICH TO CONTROLLER NUMBER 2<SPACE><ENTER>

OR

C>CCB.SYS<CONTROLLERNO3><SELECTED>AIR BRAKE CONTROLLER NUMBER 1 FAILURE - SWTICH TO CONTROLLER NUMBER 3<SPACE><ENTER>

C> C1AUTOMATICHANDLEFREQUENCYHIGH.BAT<RETURNING TO CONTROLLER NUMBER 1> = = <RESULT PENALTY BRAKE APPLICATION>

C>CCB.EXE\CONTROLLER1.SYS

C> CONTROLLER1.SYS<RESET> CHECK DRIVER AIRBRAKESELFTEST.EXE

C> <FUALTCODE27><CLEAR> = = <AIRBRAKESELFTEST><PASS>

(C1 Independent Handle Frequency High):CCB.EXE

CCB.CONFIG.SYS<ON>

AIRBRAKESELFTEST.EXE<CHECKDRIVER>

CONTROLLER1.SYS<ON/OFF> ON

C1INDEPENENTHANDLE.SYS<RELEASE POSITION> = = <OPERATIONAL>

C1INDEPENDENTHANDLEFREQUENCYHIGH.BAT

C><C1INDEPENDENTHANDLE.SYS><ABOVE 11489 HZ> !!!WARNING-AIR BRAKE FAILURE - GRADUATED INDEPENDENT BRAKING IS NOT AVAILABLE!!!

C>><C1INDEPENDENTHANDLE.SYS><ABOVE 11489 HZ> = = <INDEPENDENTBRAKES><FULL APPLIED>

C1INDEPENDENTHANDLEFREQUENCYLOW.BAT

ERRORCODEdiagnosticcode28/C1INDEPENDENTHANDLEFREQUENCYLOW.BAT

C:C1INDEPENDENTHANDLEFREQUENCYLOW.BAT

C:AUTOERRORCODE.EXE COPY

C:/ERRORCODEdiagnosticcode28/C1INDEPENDENTHANDLEFREQUENCYLOW.BAT FAULTCODE1.COM

FAULT CODE1.COM = DEFECTIVE CONTROLLER

C:/ERRORCODEdiagnosticcode28/C1INDEPENDENTHANDLEFREQUENCYLOW.BAT FAULTCODE2.COM

FAULT CODE2.COM= FAULT WIRING

C:/ERRORCODEdiagnosticcode28/C1INDEPENDENTHANDLEFREQUENCYLOW.BAT FAULTBIN.BAT /V

THE TIME IS <SPACE>t_THE DATE IS <SPACE>d

C:\TROUBLESHOOT.EXE\Diagnostic Code 28_No C1 Controller.TXT<OPEN TEXT VIEWER Y/N>

C>CCB.SYS<CONTROLLERNO2><SELECTED>AIR BRAKE CONTROLLER NUMBER 1 FAILURE - SWTICH TO CONTROLLER NUMBER 2<SPACE><ENTER> Y/N

OR

C>CCB.SYS<CONTROLLERNO3><SELECTED>AIR BRAKE CONTROLLER NUMBER 1 FAILURE - SWTICH TO

CONTROLLER NUMBER 3<SPACE><ENTER> Y/N

C>CCB.EXE\CONTROLLER1.SYS

C> CONTROLLER1.SYS<RESET> CHECK DRIVER AIRBRAKESELFTEST.EXE

C> <FUALTCODE27><CLEAR> = = <AIRBRAKESELFTEST><PASS>

Diagnostic Code 29(C1 Independent Release Switch Stuck Open)

INDEPENDENTRELEASESWITCH1.SYS<CLOSED>

CONTROLLER1.SYS

C1INDEPENDENTHANDLE.SYS<RELEASE>

DELAYCOUNTER.SYS

C1INDEPENDENTRELEASESWITCH1STUCKOPEN.BAT

C><C1INDEPENDENTHANDLE.SYS><GREATER THAN OR EQUAL TO 11000HZ> = = <DELAYCOUNTER><2SECONDS>

THEN

C><INDEPENDENTRELEASESWITCH1><OPEN> = = <MESSAGE> C1 INDEPENDENT RELEASE SWITCH STUCK OPEN<SPACE><ENTER>

C1INDEPENDENTRELEASESWITCH1STUCKOPEN.BAT

ERRORCODEdiagnosticcode29/C1INDEPENDENTRELEASESWITCH1STUCKOPEN.BAT

C:/C1INDEPENDENTRELEASESWITCH1STUCKOPEN.BAT

C:AUTOERRORCODE.EXE COPY

C;/ERRORCODEdiagnosticcode29/C1INDEPENDENTRELEASESWITCH1STUCKOPEN.BAT FAULTCODE1.COM

C:/ERRORCODEdiagnosticcode29/C1INDEPENDENTRELEASESWITCH1STUCKOPEN.BAT FAULTBIN.BAT /V

THE TIME IS <SPACE>t_THE DATE IS <SPACE>d

C:\TROUBLESHOOT.EXE\Diagnostic Code 29_No C1 Controller.TXT<OPEN TEXT VIEWER Y/N>

C:<FAULTCODE29><CLEAR> = = <C1INDEPENDENTHANDLE><RELEASE>

Diagnostic Code 2A(C1 Independent Release Switch Stuck Closed):

INDEPENDENTRELEASESWITCH1.SYS<CLOSED>

CONTROLLER1.SYS

C1INDEPENDENTHANDLE.SYS<RELEASE>

DELAYCOUNTER.SYS

C1INDEPENDENTRELEASESWITCH1STUCKOPEN.BAT

C><**C1INDEPENDENTHANDLE.SYS><BELOW 10589 HZ> = = <DELAYCOUNTER><2SECONDS>**

THEN

C><INDEPENDENTSWITCH><CLOSED> = = <MESSAGE:CODE2A>C1 INDEPENDENT RELEASE SWITCH STUCK CLOSED<SPACE><ENTER>

C1INDEPENDENTRELEASESWITCH1STUCKOPEN.BAT

ERRORCODEdiagnosticcode2A/C1INDEPENDENTRELEASESWITCH1STUCKOPEN.BAT

C:/C1INDEPENDENTRELEASESWITCH1STUCKOPEN.BAT

C:/AUTOERRORCODE.EXE COPY

C:ERRORCODEdiagnosticcode2A/C1INDEPENDENTRELEASESWITCH1STUCKOPEN.BAT FAULTCODE1.COM

C:ERRORCODEdiagnosticcode2A/C1INDEPENDENTRELEASESWITCH1STUCKOPEN.BAT FAULTBIN/BAT /V

THE TIME IS <SPACE>t_THE DATE IS <SPACE>d

C:\TROUBLESHOOT.EXE\Diagnostic Code 2A_No C1 Controller.TXT<OPEN TEXT VIEWER Y/N>

C:<FAULTCODE2A><CLEAR> = = <C1INDEPENDENTHANDLE><RELEASE>

Diagnostic Code 2B(C1 Independent Max Switch Stuck Open):

INDEPENDENTMAXSWITCH1.SYS

CONTROLLER1.SYS

C1INDEPENDENTHANDLE.SYS

DELAYCOUNTER.SYS

C1INDEPENTDENTMAXSWITCHSTUCKOPEN.BAT

C><C1INDEPENDENTHANDLE.SYS><EQUALTO OR BELOW 3218 HZ> = = <DELAYCOUNTER><2SECONDS>

THEN

C><C1INDEPENDENTMAXSWITCH><OPEN> = = <MESSAGECODE:2B>C1 IDEPENDENT MAX SWITCH STUCK OPEN<SPACE><ENTER>

C1INDEPENTDENTMAXSWITCHSTUCKOPEN.BAT

ERRORCODEdiagnosticcode2B/C1INDEPENTDENTMAXSWITCHSTUCKOPEN.BAT

C:/C1INDEPENTDENTMAXSWITCHSTUCKOPEN.BAT

C:AUTOERRORCODE.EXE COPY

C:ERRORCODEdiagnosticcode2B/C1INDEPENTDENTMAXSWITCHSTUCKOPEN.BAT FAULTCODE1.COM

C:ERRORCODEdiagnosticcode2B/C1INDEPENTDENTMAXSWITCHSTUCKOPEN.BAT FAULTBIN/BAT /V

THE TIME IS <SPACE>t_THE DATE IS <SPACE>d

C:\TROUBLESHOOT.EXE\Diagnostic Code 2B_No C1 Controller.TXT<OPEN TEXT VIEWER Y/N>

C:<FAULTCODE2B><CLEAR> = = <C1INDEPENDENTHANDLE><FULLPOSITION>

Diagnostic Code 2C(C1 Independent Max Switch Stuck Closed):

INDEPENDENTMAXSWITCH1.SYS

CONTROLLER1.SYS

C1INDEPENDENTHANDLE.SYS

DELAYCOUNTER.SYS

C1INDEPENTDENTMAXSWITCHSTUCKCLOSED.BAT

C>C1INDEPENDENTHANDLE.SYS><GREATER THAN 3629 HZ> = = <DELAYCOUNTER.SYS><2SECONDS>

THEN

C><C1INDEPENDENTMAXSWITCH><CLOSED> = = <MESSAGECODE:2C>C1 INDEPENDENT MAX SWITCH STUCK CLOSED<SPACE><ENTER>

C1INDEPENTDENTMAXSWITCHSTUCKCLOSED.BAT

ERRORCODEdiagnosticcode2C/C1INDEPENTDENTMAXSWITCHSTUCKCLOSED.BAT

C:/C1INDEPENTDENTMAXSWITCHSTUCKCLOSED.BAT

C:/AUTOERRORCODE.EXE COPY

C:/ERRORCODEdiagnosticcode2C/C1INDEPENTDENTMAXSWITCHSTUCKCLOSED.BAT FAULTCODE1.COM

C:/ERRORCODEdiagnosticcode2C/C1INDEPENTDENTMAXSWITCHSTUCKCLOSED.BAT FAULTBIN/BAT /V

THE TIME IS <SPACE>t_THE DATE IS <SPACE>d

C:\TROUBLESHOOT.EXE\Diagnostic Code 2C_No C1 Controller.TXT<OPEN TEXT VIEWER Y/N>

C:<FAULTCODE2C><CLEAR> = = <C1INDEPENDENTHANDLE><OTHER THAN FULLPOSITION>

Diagnostic Code 2D(C1 Bail Off Switch Stuck Closed):

CCB.EXE

BAILOFFSWITCH1.SYS<OPEN>

CONTROLLER1.SYS

C1INDEPENDENTHANDLE.SYS<NON DEPRESSED>

COUNTER.SYS

BRAKECYLINDER.SYS

C1BAILOFFSWITCHSTUCKCLOSED.BAT

C><BAILOFFSWITCH1><READS CLOSED FOR 50SECONDS> = = <MESSAGE:2D>BAIL OFF SWITCH STUCK CLOSED<SPACE><ENTER>

C><MESSAGE:2D><PRIOR 10 SECONDS BEFORE LOGGING> = = <OVERRIDE:BAILOFFREQUEST><BRAKE CYLINDER RISE TO EMERGENCY>

C>PROMPT OPERATOR<RELEASE AND RE-DEPRESS BAIL OFF> = = <BRAKECYLINDER><RELEASE> Y/N

THEN

C>IF <BAILOFFSWITCH1><REMAINS CLOSED> = = <CONTINUE OVERRIDE C1BAILOFF REQUEST Y/N><MESSAGE AIR BRAKE FAILURE - BAIL OFF IS NOT AVAILABLE>

C1BAILOFFSWITCHSTUCKCLOSED.BAT

ERRORCODEdiagnosticcode2d/C1BAILOFFSWITCHSTUCKCLOSED.BAT

C:AUTOERRORCODE.EXE COPY

C:/ERRORCODEdiagnosticcode2d/C1BAILOFFSWITCHSTUCKCLOSED.BAT FAULTCODE1.COM

FAULTCODE1.COM

FAULTCODE1=SHORT<CLOSED CIRCUIT> IN BAIL OFF WIRING

FUALTCODE2.COM

FAULTCODE2=CONTINOUS DEPRESSION OF BAIL OFF RING

C:AUTOERRORCODE.EXE COPY

C:/ERRORCODEdiagnosticcode2d/C1BAILOFFSWITCHSTUCKCLOSED.BAT

FAULTBIN.BAT /V

THE TIME IS <SPACE>t_THE DATE IS <SPACE>d

C:<FAULTCODE2D><CLEARS> = = <C1BAILOFFSWITCH><OPENS>

C>CCB.SYS<CONTROLLERNO2><SELECTED>AIR BRAKE FAILURE -BAIL OFF IS NOT AVAILAVLE - SWTICH TO CONTROLLER NUMBER 2<SPACE><ENTER>

OR

C>CCB.SYS<CONTROLLERNO3><SELECTED>AIR BRAKE FAILURE -BAIL OFF IS NOT AVAILAVLE - SWTICH TO CONTROLLER NUMBER 3<SPACE><ENTER>

C:\TROUBLESHOOT.EXE\Diagnostic Code 2D_No C1 Controller.TXT<OPEN TEXT VIEWER Y/N>

Diagnostic Code 30(No C2 Controller):

C:\CCB.EXE

CCB.CONFIG.SYS<ON>

AIRBRAKESELFTEST.EXE<CHECKDRIVER>

CONTROLLER2.SYS<ON/OFF> ON

C> <C2INDEPENDENTHANDLE><FREQUENCY GREATER THAN 100HZ> = = <AUTOMATICHANDLE><FREQUENCY GREATER THAN 100HZ>

CONTROLLER1.SYS<FUNCTIONING>

C> IF <C2INDEPENDENTHANDLE><FREQUENCY LESS THAN 100HZ> = = <AUTOMATICHANDLE><FREQUENCY LESS THAN 100HZ>

THEN

c> CONTOLLER2.SYS<MALFUNCTION>WARNING!!! CONTROLLER NUMBER FLAGGED MISSING!!! <SPACE><ENTER>

ERRORCODEdiagnosticcode30\NOCONTROLLER1.BAT

C:\ERRORCODEdiagnosticcode30\NOCONTROLLER1.BAT

c:\ERRORCODEdiagnosticcode30\NOC1CONTROLLER2.SYS IF <INDEPENDENT HANDLE><FREQUENCY LESS THAN 100HZ> = = <AUTOMATIC HANDLE><FREQUENCY LESS THAN 100HZ>!!!WARNING NO CONTROLLER NUMBER 2!!!<SPACE><ENTER>

C:AUTOERRORCODE.EXE COPY

ERRORCODEdiagnosticcode30\NOCONTROLLER1.BAT FAULTCODE20.COM

C:AUTOERRORCODE.EXE COPY

ERRORCODEdiagnosticcode30\NOCONTROLLER1.BAT FAULTBIN.BAT /V

THE TIME IS <SPACE>T_THE DATE IS <SPACE>D

C:\TROUBLESHOOT.EXE\Diagnostic Code 30_No C1 Controller.TXT<OPEN TEXT VIEWER Y/N>

C>CCB.EXE\CONTROLLER2.SYS

C> CONTROLLER2.SYS<RESET> CHECK DRIVER AIRBRAKESELFTEST.EXE

C:\TROUBLESHOOT.EXE\Diagnostic Code 30_No C1 Controller.TXT

C> <FUALTCODE30><CLEAR> = = <AIRBRAKESELFTEST><PASS>

CCB.SYS.CONFIG<DEFAULT

CONTROLLERNO2.SYS<DEFAULT>

THEN

LEADTRAILSWITCH1=c:\LEAD/TRAILSWITCH2\LEAD/TRAILSWITCH2.SYS<TRAIL>

AUTOMATICEMERGENCYSWITCH2=C:\AUTOMATICEMERGENCYSWITCH2.SYS<CLOSED>

C><LEAD/TRAILSWITCH2.SYS<DEEFAULT> AIR BRAKE FAILURE- USE LOCOMOTIVE IN TRAIL ONLY<SPACE><ENTER>

C> CCB.SYS<CONTROLLERNNO1> <SELECTED> AIR BRAKE CONTROLLER NUMBER 1 FAILURE - SWITCH TO AIR BRAKE CONTROLLER NUMBER 1<SPACE><ENTER>

OR

C>CCB.SYS<CONTROLLERNNO3> <SELECTED> AIR BRAKE CONTROLLER NUMBER 1 FAILURE - SWITCH TO AIR BRAKE CONTROLLER NUMBER 3<SPACE><ENTER>

C>CCB.SYS<CONTROLLERNO1><INOPERATIVE> = = <CONTROLLERNO3><INOPERATIVE>

THEN

C><LEAD/TRAILSWITCH2.SYS<DEEFAULT> AIR BRAKE FAILURE- USE LOCOMOTIVE IN TRAIL ONLY<SPACE><ENTER>

CONTROLLER2.SYS.<ON/OFF>

CONTROLLER3.SYS<ON/OFF>

NO C2 CONTROLLER DEFAULT CODE 30

C>CCB.SYS<ON>= = <CONTROLLER2.SYS>

Diagnostic Code 31(C2 Automatic Handle Frequency Low):

C:\CCB.EXE

CCB.CONFIG.SYS<ON>

AIRBRAKESELFTEST.EXE<CHECKDRIVER>

CONTROLLER2.SYS<ON/OFF> ON

C>CUTOUTRELAYS.SYS

C1AUTOMATICHANDLEFREQUENCYLOW.BAT

C> IF CONTROLLER2<AUTOMATICHANDLE.SYS><FREQUENCY LESS THAN 808HZ>!!!WARNING!!! CONTROLLER NUMBER 2 AUTOMATIC HANDLE FREQUENCY LOW!!!<SPACE><ENTER>

THEN

C> CONTROLLER2<AUTOMATICHANDLE.SYS><FREQUENCY LESS THAN 808HZ> = = <CUTOUTRELAY.SYS><PENALTYAPPLICATION>

C>CONTROLLER2<AUTOMATICHANDLE.SYS><FREQUENCY LESS THAN 808HZ> = = <BRAKEPIPE.SYS><EXHUAST SERVICE APPLICATION RATE>

ERRORCODEdiagnosticcode31\C1AUTOMATICHANDLEFREQUENCYLOW.BAT

C:AUTOERRORCODE.EXE COPY

C:ERRORCODEdiagnosticcode31\C1AUTOMATICHANDLEFREQUENCYLOW.BAT FAULTCODE1.COM

C:ERRORCODEdiagnosticcode31\C1AUTOMATICHANDLEFREQUENCYLOW.BAT FAULTCODE1.COM

FAULTCODE 1 = FAULTY CONTROLLER

C:ERRORCODEdiagnosticcode31\C1AUTOMATICHANDLEFREQUENCYLOW.BAT FAULTCODE2.COM

FAULTCODE 2 = FAULTY WIRING

C:AUTOERRORCODE.EXE COPY

C:ERRORCODEdiagnosticcode31\C1AUTOMATICHANDLEFREQUENCYLOW.BAT FAULTBIN.BAT /V

THE TIME IS <SPACE>t_THE DATE IS <SPACE>d

C:\TROUBLESHOOT.EXE\Diagnostic Code 31_No C2 Controller.TXT<OPEN TEXT VIEWER Y/N>

C>FAULTCODE1.COM<CONTROLLER2.SYS\AUTOMATICHANDLE><INCORRECTPOSITION

C>FAULTCODE2.CON<DEENERGIZED>!!!WARNING!!! DISCONNECTED OR DAMAGED FIBER OBTIC CABLE!!! <SPACE><ENTER>

C>CCB.SYS<CONTROLLERNO1><SELECTED>AIR BRAKE CONTROLLER NUMBER 2 FAILURE - SWTICH TO CONTROLLER NUMBER1<SPACE><ENTER> Y/N

OR

C>CCB.SYS<CONTROLLERNO3><SELECTED>AIR BRAKE CONTROLLER NUMBER 1 FAILURE - SWTICH TO CONTROLLER NUMBER 3<SPACE><ENTER> Y/N

C>CCB.EXE\CONTROLLER1.SYS

C> CONTROLLER1.SYS<RESET> CHECK DRIVER AIRBRAKESELFTEST.EXE

C:\TROUBLESHOOT.EXE\Diagnostic Code 21_No C1 Controller.TXT<OPEN TEXT VIEWER Y/N>

C> <FUALTCODE21><CLEAR> = = <AIRBRAKESELFTEST><PASS>

Diagnostic Code 32(C2 Automatic Handle Frequency High):

C:\CCB.EXE

CCB.CONFIG.SYS<ON>

AIRBRAKESELFTEST.EXE<CHECKDRIVER>

CONTROLLER2.SYS<ON/OFF> ON

C>CUTOUTRELAYS.SYS

C2AUTOMATICHANDLEFREQUENCYHIGH.BAT

C> IF CONTROLLER2<AUTOMATICHANDLE.SYS><FREQUENCY GREATER THAN 11392HZ>!!!WARNING!!! CONTROLLER NUMBER 2 AUTOMATIC HANDLE FREQUENCY HIGH!!!<SPACE><ENTER>

THEN

C> CONTROLLER2<AUTOMATICHANDLE.SYS><FREQUENCY GREATER THAN 11392HZ> = = <CUTOUTRELAY.SYS><PENALTYAPPLICATION>

C>CONTROLLER2<AUTOMATICHANDLE.SYS><FREQUENCY GREATER THAN 11392HZ> = = <BRAKEPIPE.SYS><EXHUAST SERVICE APPLICATION RATE>

C:ERRORCODEdiagnosticcode32\C1AUTOMATICHANDLEFREQUENCYHIGH.BAT FAULTCODE1.COM

C:ERRORCODEdiagnosticcode32\C1AUTOMATICHANDLEFREQUENCYHIGH.BAT FAULTBIN.BAT /V

THE TIME IS <SPACE>t_THE DATE IS <SPACE>d

C:\TROUBLESHOOT.EXE\Diagnostic Code 32_No C2 Controller.TXT<OPEN TEXT VIEWER Y/N>

C>CCB.SYS<CONTROLLERNO1><SELECTED>AIR BRAKE CONTROLLER NUMBER 1 FAILURE - SWTICH TO CONTROLLER NUMBER2 <SPACE><ENTER>

OR

C>CCB.SYS<CONTROLLERNO3><SELECTED>AIR BRAKE CONTROLLER NUMBER 1 FAILURE - SWTICH TO CONTROLLER NUMBER 3<SPACE><ENTER>

C> C2AUTOMATICHANDLEFREQUENCYHIGH.BAT<RETURNING TO CONTROLLER NUMBER 2> = = <RESULT PENALTY BRAKE APPLICATION>

C>CCB.EXE\CONTROLLER1.SYS

C> CONTROLLER1.SYS<RESET> CHECK DRIVER AIRBRAKESELFTEST.EXE

C:\TROUBLESHOOT.EXE\Diagnostic Code 32_No C2 Controller.TXT <OPEN TEXT VIEWER Y/N>

C> <FUALTCODE32><CLEAR> = = <AIRBRAKESELFTEST><PASS>

Diagnostic Code 33(C2 Automatic Release Switch Stuck Open)

AUTOMATICRELEASESWITCH.SYS

C2AUTOMATICBRAKE=C:\C2AUTMATICBRAKE.SYS

C2AUTOMATICRELEASESWITCH2=C:\C2AUTOMATICRELEASESWITHC2.SYS<RELEASE>

DELAYCOUNTER=C:\DELAYCOUNTER.SYS

C2AUTOMATICRELEASESWITCHSTUCKOPEN.BAT

C>IF <C2AUTOMATICRELEASESWITCH ><OPEN> = = <C2AUTOMATICHANDLE><RELEASE>!!!WARNING AUTOMATIC RELEASE SWITCH STUCK OPEN!!!<SPACE><ENTER>

C><C2AUTOMATICRELEASESWITCH><OPEN> = = <DELEAYCOUNTER.SYS<GREATER THAN 2SECONDS> !!!WARNING AUTOMATIC RELEASE SWITCH STUCK OPEN!!! <SPACE><ENTER>

C><C2AUTOMATICBRAKE.SYS><GREATER THAN 11000HZ> = = <C2AUTOMATICRELEASESWITCH<OPEN>!!!WARNING AUTOMATIC RELEASE SWITCH STUCK OPEN!!!<SPACE><ENTER>

ERRORCODEdiagnosticcode33\C2AUTOMATICRELEASESWITCHSTUCKOPEN.BAT

C:ERRORCODEdiagnosticcode33\C2AUTOMATICRELEASESWITCHSTUCKOPEN.BAT

C:AUTOERRORCODE.EXE COPY

C:ERRORCODEdiagnosticcode33\C2AUTOMATICRELEASESWITCHSTUCKOPEN.BAT FAULTCOD1.COM

C:AUTOERRORCODE.EXE COPY

C:ERRORCODEdiagnosticcode33\C2AUTOMATICRELEASESWITCHSTUCKOPEN.BAT FAULTBIN.BAT /V

THE TIME IS <SPACE>t_THE DATE IS <SPACE>d

C>CCB.SYS<CONTROLLERNO1><SELECTED>AIR BRAKE CONTROLLER NUMBER 2 FAILURE - SWTICH TO CONTROLLER NUMBER 1<SPACE><ENTER>

OR

C>CCB.SYS<CONTROLLERNO3><SELECTED>AIR BRAKE CONTROLLER NUMBER 2 FAILURE - SWTICH TO CONTROLLER NUMBER 3<SPACE><ENTER>

C:\TROUBLESHOOT.EXE\Diagnostic Code 33_No 21 Controller.TXT<OPEN TEXT VIEWER Y/N>

C> <FUALTCODE33><CLEAR> = = <C2AUTOMATICHANDLE><RELEASE>

THEN

C> AUTOMATICRELEASESWITCH.SYS<CLOSED>

Diagnostic Code 34(C2 Automatic Release Switch Stuck Closed):

AUTOMATICRELEASESWITCH.SYS

C2AUTOMATICBRAKE=C:\C2AUTMATICBRAKE.SYS

C2AUTOMATICRELEASESWITCH2=C:\C2AUTOMATICRELEASESWITHC2.SYS<RELEASE>

DELAYCOUNTER=C:\DELAYCOUNTER.SYS

C2AUTOMATICRELEASESWITCHSTUCKCLOSED.BAT

C>IF <C2AUTOMATICRELEASESWITCH ><OPEN> = = <C2AUTOMATICHANDLE><RELEASE>!!!WARNING AUTOMATIC RELEASE SWITCH STUCK OPEN!!!<SPACE><ENTER>

C> IF <C2AUTOMATICRELEASESWITCH><OPEN> = = <DELEAYCOUNTER.SYS<GREATER THAN 2SECONDS> !!!WARNING AUTOMATIC RELEASE SWITCH STUCK OPEN!!!<SPACE><ENTER>

C> IF<C2AUTOMATICBRAKE.SYS><GREATER THAN 11000HZ> = = <C2AUTOMATICRELEASESWITCH<OPEN>!!!WARNING AUTOMATIC RELEASE SWITCH STUCK OPEN!!!<SPACE><ENTER>

THEN

C>IF<C2AUTOMATICBRAKE.SYS><LESS THAN 10508HZ> = = <C2AUTOMATICRELEASESWITCH<CLOSED>!!!WARNING AUTOMATIC RELEASE SWITCH STUCK CLOSED!!!<SPACE><ENTER>

C><C2AUTOMATICBRAKERELEASWITCH>CLOSED>

C2AUTOMATICRELEASESWITCHSTUCKCLOSED.BAT

ERRORCODEdiagnosticcode34\C2AUTOMATICRELEASESWITCHSTUCKCLOSED.BAT

C:ERRORCODEdiagnosticcode34\C2AUTOMATICRELEASESWITCHSTUCKCLOSED.BAT

C:AUTOERRORCODE.EXE COPY

C:ERRORCODEdiagnosticcode34\C2AUTOMATICRELEASESWITCHSTUCKCLOSED.BA

T FAULTCOD1.COM

C:AUTOERRORCODE.EXE COPY

C:ERRORCODEdiagnosticcode34\C2AUTOMATICRELEASESWITCHSTUCKCLOSED.BA
T FAULTBIN.BAT /V

THE TIME IS <SPACE>t_THE DATE IS <SPACE>d

C>CCB.SYS<CONTROLLERNO1><SELECTED>AIR BRAKE CONTROLLER NUMBER 2 FAILURE - SWTICH TO CONTROLLER NUMBER 1<SPACE><ENTER>

OR

C>CCB.SYS<CONTROLLERNO3><SELECTED>AIR BRAKE CONTROLLER NUMBER 2 FAILURE - SWTICH TO CONTROLLER NUMBER 3<SPACE><ENTER>

C:\TROUBLESHOOT.EXE\Diagnostic Code 34_No C2 Controller.TXT<OPEN TEXT VIEWER Y/N>

CLEAR FAULT

C> <FUALTCODE34><CLEAR> = = <C2AUTOMATICHANDLE><RELEASE>

THEN

C> AUTOMATICRELEASESWITCH.SYS<OPEN>

Diagnostic Code 35(C2 Automatic Emergency Switch Stuck Open):

C:\CCB.EXE

CCB.CONFIG.SYS.ON

AUTOEMERGENCYSWITCH2.SYS

C2CONTROLLER.SYS.SYS

C2AUTOMATICHANDLE.SYS

DELAYCOUNTER.SYS

CUTOUTRELAY.SYS

BRAKEPIPES.YS

C2AUTOMATICEMERGENCYSWITCHSTUCKOPEN.BAT

C>IF CONTROLLER2<C2AUTOMATICHANDLE><FREQUENCY GREATER THAN 1692 HZ> = = <AUTOMATICEMERGENCYSWITCH2><OPEN>

C>IF CONTROLLER2<C2AUTOMATICHANDLE><FREQUENCY GREATER THAN 1692 HZ> = = <DELAY COUNTER><2SECONDS>

C>CONTROLLER2<C2AUTOMATICHANDLE><EMERGENCY BRAKE APPLICATION>= =<CUT OUT RELAY><OUT>

C>CONTROLLER2<C2AUTOMATICHANDLE><EMERGENCY BRAKE APPLICATION>= <BRAKEPIPE.SYS><REDUCED TO ZERO PSI>

THEN

C><AUTOMATICEMERGNCYSWTICH2><REMAINS OPEN>!!!WARNING AUTOMATIC EMERGENCY SWITCH STUCK OPEN!!!<SPACE><ENTER>

ERRORCODEdiagnosticcode35

C2AUTOMATICEMERGENCYSWITCHSTUCKOPEN.BAT

C:\AUTOERRORCODE.EXE COPY

C:ERRORCODEdiagnostic code35\C2AUTOMATICEMERGENCYSWITCHSTUCKOPEN.BAT FAULTCODE1.COM

C:\AUTOERRORCODE.EXE COPY

C:ERRORCODEdiagnostic code35\C2AUTOMATICEMERGENCYSWITCHSTUCKOPEN.BAT FAULTBIN.BAT /V

THE TIME IS <SPACE>t_THE DATE IS <SPACE>d

C:\TROUBLESHOOT.EXE\Diagnostic Code 35_No C2 Controller.TXT<OPEN TEXT VIEWER Y/N>

C>CCB.SYS<CONTROLLERNO1><SELECTED>AIR BRAKE CONTROLLER NUMBER 2 FAILURE - SWTICH TO CONTROLLER NUMBER 1<SPACE><ENTER> Y/N

OR

C>CCB.SYS<CONTROLLERNO3><SELECTED>AIR BRAKE CONTROLLER NUMBER 2 FAILURE - SWTICH TO CONTROLLER NUMBER 3<SPACE><ENTER> Y/N

C> FUALTCODE35<CLEAR> IF <CONTROLLERNUMBER2><ACTIVE> = = <AUTOEMERGENCYSWITCH1<CLOSED>

C>RESET <EMERGENCY BRAKE APPLICATION>

C><AUTOMATICEMERGENCYSWTICH2.SYS><CLOSED>

C>IF <C2AUTOMATICHANDLE><NOT IN EMERGENCY POSITION>

Diagnostic Code 36(C2 Automatic Emergency Switch Stuck Closed):

C:\CCB.EXE

CCB.CONFIG.SYS.ON

AUTOEMERGENCYSWITCH2.SYS

C2CONTROLLER.SYS.SYS

C2AUTOMATICHANDLE.SYS

DELAYCOUNTER.SYS

CUTOUTRELAY.SYS

BRAKEPIPES.SYS

C2AUTOMATICEMERGENCYSWITCHSTUCKCLOSED.BAT

C>IF CONTROLLER2<C2AUTOMATICHANDLE><FREQUENCY BELOW 1200 HZ> = = <AUTOMATICEMERGENCYSWITCH2><CLOSED>

C>IF CONTROLLER2<C2AUTOMATICHANDLE><FREQUENCY BELOW 1200 HZ> = = <DELAY COUNTER><2SECONDS>

THEN

C><AUTOMATICEMERGNCYSWTICH2><REMAINS OPEN>!!!WARNING AUTOMATIC EMERGENCY SWITCH STUCK CLOSED!!!<SPACE><ENTER>

ERRORCODEdiagnosticcode36

C2AUTOMATICEMERGENCYSWITCHSTUCKCLOSED.BAT

C:\AUTOERRORCODE.EXE COPY

C:\ERRORCODEdiagnosticcode36\C2AUTOMATICEMERGENCYSWITCHSTUCKCLOSED.BAT

C:\AUTOERRORCODE.EXE COPY

C:\ERRORCODEdiagnosticcode36\C2AUTOMATICEMERGENCYSWITCHSTUCKCLOSE

D.BAT FAULTCODE1.COM

C:\AUTOERRORCODE.EXE COPY

C:ERRORCODEdiagnostic code36\C2AUTOMATICEMERGENCYSWITCHSTUCKCLOSED.BAT FAULTBIN.BAT /V

THE TIME IS <SPACE>t_THE DATE IS <SPACE>d

C:\TROUBLESHOOT.EXE\Diagnostic Code 36_No C2 Controller.TXT<OPEN TEXT VIEWER Y/N>

C>CCB.SYS<CONTROLLERNO1><SELECTED>AIR BRAKE CONTROLLER NUMBER 2 FAILURE - SWTICH TO CONTROLLER NUMBER 1<SPACE><ENTER> = = <FAULTCODE36><CLEAR>

OR

C>CCB.SYS<CONTROLLERNO3><SELECTED>AIR BRAKE CONTROLLER NUMBER 2 FAILURE - SWTICH TO CONTROLLER NUMBER 3<SPACE><ENTER> = = <FAULTCODE36><CLEAR>

C:CONTROLLERNUMBER2.SYS<C2AUTOMATICHANDLE><EMERGENCYPOSITION> = = <AUTOEMERGENCYSWITCH><OPEN>

THEN

C:\C2AUTOMATICEMERGENCYSWITCHSTUCKCLOSED.EXE <FAULT CLEAR\RESET>

(C2 Independent Handle Frequency Low):

CCB.EXE

CCB.CONFIG.SYS<ON>

AIRBRAKESELFTEST.EXE<CHECKDRIVER>

CONTROLLER2.SYS<ON/OFF> ON

C2INDEPENENTHANDLE.SYS<RELEASE POSITION> = = <OPERATIONAL>

C2INDEPENDENTHANDLEFREQUENCYLOW.BAT

C><C2INDEPENDENTHANDLE.SYS><BELOW 2729 HZ> !!!WARNING-AIR BRAKE FAILURE - GRADUATED INDEPENDENT BRAKING IS NOT AVAILABLE!!!

C>><C2INDEPENDENTHANDLE.SYS><BELOW 2729 HZ> = = <INDEPENDENTBRAKES><FULL APPLIED>

C2INDEPENDENTHANDLEFREQUENCYLOW.BAT

ERRORCODEdiagnosticcode37/C2INDEPENDENTHANDLEFREQUENCYLOW.BAT

C:C2INDEPENDENTHANDLEFREQUENCYLOW.BAT

C:AUTOERRORCODE.EXE COPY

C:/ERRORCODEdiagnosticcode37/C2INDEPENDENTHANDLEFREQUENCYLOW.BAT FAULTCODE1.COM

C:/ERRORCODEdiagnosticcode37/C2INDEPENDENTHANDLEFREQUENCYLOW.BAT FAULTCODE2.COM

C:/ERRORCODEdiagnosticcode37/C2INDEPENDENTHANDLEFREQUENCYLOW.BAT FAULTBIN.BAT /V

THE TIME IS <SPACE>t_THE DATE IS <SPACE>d

C:\TROUBLESHOOT.EXE\Diagnostic Code 37_No C2 Controller.TXT<OPEN TEXT VIEWER Y/N>

C>CCB.SYS<CONTROLLERNO1><SELECTED>AIR BRAKE CONTROLLER NUMBER 2 FAILURE - SWTICH TO CONTROLLER NUMBER 1<SPACE><ENTER>

OR

C>CCB.SYS<CONTROLLERNO3><SELECTED>AIR BRAKE CONTROLLER NUMBER 2 FAILURE - SWTICH TO CONTROLLER NUMBER 3<SPACE><ENTER>

C> C2AUTOMATICHANDLEFREQUENCYHIGH.BAT<RETURNING TO CONTROLLER NUMBER 2> = = <RESULT PENALTY BRAKE APPLICATION>

C>CCB.EXE\CONTROLLER2.SYS

C> CONTROLLER2.SYS<RESET> CHECK DRIVER AIRBRAKESELFTEST.EXE

C> <FUALTCODE37><CLEAR> = = <AIRBRAKESELFTEST><PASS>

Diagnostic Code 38(C2 Independent Handle Frequency High):CCB.EXE

CCB.CONFIG.SYS<ON>

AIRBRAKESELFTEST.EXE<CHECKDRIVER>

CONTROLLER2.SYS<ON/OFF> ON

C2INDEPENENTHANDLE.SYS<RELEASE POSITION> = = <OPERATIONAL>

C2INDEPENDENTHANDLEFREQUENCYHIGH.BAT

C><C2INDEPENDENTHANDLE.SYS><ABOVE 11489 HZ> !!!WARNING-AIR BRAKE FAILURE - GRADUATED INDEPENDENT BRAKING IS NOT AVAILABLE!!!

C>><C2INDEPENDENTHANDLE.SYS><ABOVE 11489 HZ> = = <INDEPENDENTBRAKES><FULL APPLIED>

C2INDEPENDENTHANDLEFREQUENCYLOW.BAT

ERRORCODEdiagnosticcode38/C2INDEPENDENTHANDLEFREQUENCYLOW.BAT

C:C2INDEPENDENTHANDLEFREQUENCYLOW.BAT

C:AUTOERRORCODE.EXE COPY

C:/ERRORCODEdiagnosticcode38/C2INDEPENDENTHANDLEFREQUENCYLOW.BAT FAULTCODE1.COM

FAULT CODE1.COM = DEFECTIVE CONTROLLER

C:/ERRORCODEdiagnosticcode38/C2INDEPENDENTHANDLEFREQUENCYLOW.BAT FAULTCODE2.COM

FAULT CODE2.COM= FAULT WIRING

C:/ERRORCODEdiagnosticcode38/C2INDEPENDENTHANDLEFREQUENCYLOW.BAT FAULTBIN.BAT /V

THE TIME IS <SPACE>t_THE DATE IS <SPACE>d

C:\TROUBLESHOOT.EXE\Diagnostic Code 38_No C2 Controller.TXT<OPEN TEXT VIEWER Y/N>

C>CCB.SYS<CONTROLLERNO1><SELECTED>AIR BRAKE CONTROLLER NUMBER 2 FAILURE - SWTICH TO CONTROLLER NUMBER 1<SPACE><ENTER> Y/N

OR

C>CCB.SYS<CONTROLLERNO3><SELECTED>AIR BRAKE CONTROLLER NUMBER 2 FAILURE - SWTICH TO

CONTROLLER NUMBER 3<SPACE><ENTER> Y/N

C>CCB.EXE\CONTROLLER2.SYS

C> CONTROLLER2.SYS<RESET> CHECK DRIVER AIRBRAKESELFTEST.EXE

C> <FUALTCODE38><CLEAR> = = <AIRBRAKESELFTEST><PASS>

Diagnostic Code 39(C2 Independent Release Switch Stuck Open)

INDEPENDENTRELEASESWITCH2.SYS<CLOSED>

CONTROLLER2.SYS

C2INDEPENDENTHANDLE.SYS<RELEASE>

DELAYCOUNTER.SYS

C2INDEPENDENTRELEASESWITCH2STUCKOPEN.BAT

C><C2INDEPENDENTHANDLE.SYS><GREATER THAN OR EQUAL TO 11000HZ> = = <DELAYCOUNTER><2SECONDS>

THEN

C><INDEPENDENTRELEASESWITCH2><OPEN> = = <MESSAGE> C2 INDEPENDENT RELEASE SWITCH STUCK OPEN<SPACE><ENTER>

C2INDEPENDENTRELEASESWITCH1STUCKOPEN.BAT

ERRORCODEdiagnosticcode39/C2INDEPENDENTRELEASESWITCH2STUCKOPEN.BAT

C:/C2INDEPENDENTRELEASESWITCH2STUCKOPEN.BAT

C:AUTOERRORCODE.EXE COPY

C;/ERRORCODEdiagnosticcode39/C2INDEPENDENTRELEASESWITCH2STUCKOPEN.BAT FAULTCODE1.COM

C:/ERRORCODEdiagnosticcode39/C2INDEPENDENTRELEASESWITCH2STUCKOPEN.BAT FAULTBIN.BAT /V

THE TIME IS <SPACE>t_THE DATE IS <SPACE>d

C:\TROUBLESHOOT.EXE\Diagnostic Code 39_No C2 Controller.TXT<OPEN TEXT VIEWER Y/N>

C:<FAULTCODE39><CLEAR> = = <C2INDEPENDENTHANDLE><RELEASE>

Diagnostic Code 3A(C2 Independent Release Switch Stuck Closed):

INDEPENDENTRELEASESWITCH2.SYS<CLOSED>

CONTROLLER2.SYS

C2INDEPENDENTHANDLE.SYS<RELEASE>

DELAYCOUNTER.SYS

C2INDEPENDENTRELEASESWITCH2STUCKOPEN.BAT

C><**C2INDEPENDENTHANDLE.SYS><BELOW 10589 HZ> = = <DELAYCOUNTER><2SECONDS>**

THEN

C><INDEPENDENTSWITCH><CLOSED> = = <MESSAGE:CODE3A>C2 INDEPENDENT RELEASE SWITCH STUCK CLOSED<SPACE><ENTER>

C2INDEPENDENTRELEASESWITCH2STUCKOPEN.BAT

ERRORCODEdiagnosticcode3A/C2INDEPENDENTRELEASESWITCH1STUCKOPEN.BAT

C:/C2INDEPENDENTRELEASESWITCH2STUCKOPEN.BAT

C:/AUTOERRORCODE.EXE COPY

C:ERRORCODEdiagnosticcode3A/C2INDEPENDENTRELEASESWITCH1STUCKOPEN.BAT FAULTCODE1.COM

C:ERRORCODEdiagnosticcode3A/C2INDEPENDENTRELEASESWITCH1STUCKOPEN.BAT FAULTBIN/BAT /V

THE TIME IS <SPACE>t_THE DATE IS <SPACE>d

C:\TROUBLESHOOT.EXE\Diagnostic Code 3A_No C2 Controller.TXT<OPEN TEXT VIEWER Y/N>

C:<FAULTCODE3A><CLEAR> = = <C2INDEPENDENTHANDLE><RELEASE>

Diagnostic Code 3B(C2 Independent Max Switch Stuck Open):

INDEPENDENTMAXSWITCH2.SYS

CONTROLLER2.SYS

C2INDEPENDENTHANDLE.SYS

DELAYCOUNTER.SYS

C2INDEPENTDENTMAXSWITCHSTUCKOPEN.BAT

C><C2INDEPENDENTHANDLE.SYS><EQUALTO OR BELOW 3218 HZ> = = <DELAYCOUNTER><2SECONDS>

THEN

C><C2NDEPENDENTMAXSWITCH><OPEN> = = <MESSAGECODE:3B>C2 IDEPENDENT MAX SWITCH STUCK OPEN<SPACE><ENTER>

C2INDEPENTDENTMAXSWITCHSTUCKOPEN.BAT

ERRORCODEdiagnosticcode3B/C2INDEPENTDENTMAXSWITCHSTUCKOPEN.BAT

C:/C2INDEPENTDENTMAXSWITCHSTUCKOPEN.BAT

C:AUTOERRORCODE.EXE COPY

C:ERRORCODEdiagnosticcode3B/C2INDEPENTDENTMAXSWITCHSTUCKOPEN.BAT FAULTCODE1.COM

C:ERRORCODEdiagnosticcode3B/C2INDEPENTDENTMAXSWITCHSTUCKOPEN.BAT FAULTBIN/BAT /V

THE TIME IS <SPACE>t_THE DATE IS <SPACE>d

C:\TROUBLESHOOT.EXE\Diagnostic Code 3B_No C2 Controller.TXT<OPEN TEXT VIEWER Y/N>

C:<FAULTCODE3B><CLEAR> = = <C2INDEPENDENTHANDLE><FULLPOSITION>

Diagnostic Code 3C(C2 Independent Max Switch Stuck Closed):

INDEPENDENTMAXSWITCH2.SYS

CONTROLLER2.SYS

C2INDEPENDENTHANDLE.SYS

DELAYCOUNTER.SYS

C2INDEPENTDENTMAXSWITCHSTUCKCLOSED.BAT

C>C2INDEPENDENTHANDLE.SYS><GREATER THAN 3629 HZ> = = <DELAYCOUNTER.SYS><2SECONDS>

THEN

C><C2INDEPENDENTMAXSWITCH><CLOSED> = = <MESSAGECODE:3C>C2 INDEPENDENT MAX SWITCH STUCK CLOSED<SPACE><ENTER>

C2INDEPENTDENTMAXSWITCHSTUCKCLOSED.BAT

ERRORCODEdiagnosticcode3C/C2INDEPENTDENTMAXSWITCHSTUCKCLOSED.BAT

C:/C2INDEPENTDENTMAXSWITCHSTUCKCLOSED.BAT

C:/AUTOERRORCODE.EXE COPY

C:/ERRORCODEdiagnosticcode3C/C2INDEPENTDENTMAXSWITCHSTUCKCLOSED.BAT FAULTCODE1.COM

C:/ERRORCODEdiagnosticcode3C/C2INDEPENTDENTMAXSWITCHSTUCKCLOSED.BAT FAULTBIN/BAT /V

THE TIME IS <SPACE>t_THE DATE IS <SPACE>d

C:\TROUBLESHOOT.EXE\Diagnostic Code 3C_No C2 Controller.TXT<OPEN TEXT VIEWER Y/N>

C:<FAULTCODE3C><CLEAR> = = <C2INDEPENDENTHANDLE><OTHER THAN FULLPOSITION>

Diagnostic Code 3D(C2 Bail Off Switch Stuck Closed):

CCB.EXE

BAILOFFSWITCH2.SYS<OPEN>

CONTROLLER2.SYS

C2INDEPENDENTHANDLE.SYS<NON DEPRESSED>

COUNTER.SYS

BRAKECYLINDER.SYS

C2BAILOFFSWITCHSTUCKCLOSED.BAT

C><BAILOFFSWITCH2><READS CLOSED FOR 50SECONDS> = = <MESSAGE:3D>BAIL OFF SWITCH STUCK CLOSED<SPACE><ENTER>

C><MESSAGE:3D><PRIOR 10 SECONDS BEFORE LOGGING> = = <OVERRIDE:BAILOFFREQUEST><BRAKE CYLINDER RISE TO EMERGENCY>

C>PROMPT OPERATOR<RELEASE AND RE-DEPRESS BAIL OFF> = = <BRAKECYLINDER><RELEASE> Y/N

THEN

C>IF <BAILOFFSWITCH2><REMAINS CLOSED> = = <CONTINUE OVERRIDE C1BAILOFF REQUEST Y/N><MESSAGE AIR BRAKE FAILURE - BAIL OFF IS NOT AVAILABLE>

C2BAILOFFSWITCHSTUCKCLOSED.BAT

ERRORCODEdiagnosticcode3D/C2BAILOFFSWITCHSTUCKCLOSED.BAT

C:AUTOERRORCODE.EXE COPY

C:/ERRORCODEdiagnosticcode3D/C2BAILOFFSWITCHSTUCKCLOSED.BAT FAULTCODE1.COM

FAULTCODE1.COM

FAULTCODE1=SHORT<CLOSED CIRCUIT> IN BAIL OFF WIRING

FUALTCODE2.COM

FAULTCODE2=CONTINOUS DEPRESSION OF BAIL OFF RING

C:AUTOERRORCODE.EXE COPY

C:/ERRORCODEdiagnosticcode3D/C2BAILOFFSWITCHSTUCKCLOSED.BAT

FAULTBIN.BAT /V

THE TIME IS <SPACE>t_THE DATE IS <SPACE>d

C:<FAULTCODE3D><CLEARS> = = <C2BAILOFFSWITCH><OPENS>

C>CCB.SYS<CONTROLLERNO1><SELECTED>AIR BRAKE FAILURE -BAIL OFF IS NOT AVAILAVLE - SWTICH TO CONTROLLER NUMBER1<SPACE><ENTER>

OR

C>CCB.SYS<CONTROLLERNO3><SELECTED>AIR BRAKE FAILURE -BAIL OFF IS NOT AVAILAVLE - SWTICH TO CONTROLLER NUMBER 3<SPACE><ENTER>

C:\TROUBLESHOOT.EXE\Diagnostic Code 3D_No C2 Controller.TXT<OPEN TEXT VIEWER Y/N>

Diagnostic Code 50(Defective MR Transducer):

MAIN RESERVIOR.SYS

MAIN RESERVIOR EQUALIZING PIPE TRANSDUCER (MREP).SYS <113.787 PSI -142.233 PSI>

MAIN RESERVIOR TRANSDUCER/CONNECTOR.SYS

16 RESERVIOR .SYS

20 RESERVIOR.SYS

EQUALIZING RESERVIOR.SYS

DEFECTIVEMRTRANSDUCER.BAT

C><MAIN RESERVIOR EQUALIZING PIPE TRANSDUCER (MREP).SYS><BELOW 113.787 PSI> = = <MESSAGE50:DEFECTIVE MR TRANSDUCER>!!!WARNING DEFECTIVE MR TRANSDUCER!!!! <SPACE><ENTER>

C><MAIN RESERVIOR EQUALIZING PIPE TRANSDUCER (MREP).SYS><ABOVE 142.233 PSI> = = <MESSAGE50:DEFECTIVE MR TRANSDUCER>!!!WARNING DEFECTIVE MR TRANSDUCER!!!! <SPACE><ENTER>

C><FAULTCODE><CLEAR> = = **<MAIN RESERVIOR EQUALIZING PIPE TRANSDUCER (MREP).SYS><**113.787 PSI -142.233 PSI>

DEFECTIVEMRTRANSDUCER.BAT

ERRORCODEdiagnosticcode50/DEFECTIVEMRTRANSDUCER.BAT

C:AUTOERRORCODE.EXE COPY

C:ERRORCODEdiagnosticcode50/DEFECTIVEMRTRANSDUCER.BAT

FAULTCODE1.COM

FAULTCODE1 = DISCONNECTED OPEN CIRCUIT

FAULTCODE2.COM

FAULTCODE2 = SHORTED (CLOSED)CIRCUIT TRANSDUCER/CONNECTOR

C:/AUTOERRORCODE.EXE COPY

C:ERRORCODEdiagnosticcode50/DEFECTIVEMRTRANSDUCER.BAT
FAULTBIN.BAT /V

THE TIME IS <SPACE>t_THE DATE IS <SPACE>d

C><FAULTCODE50><CLEAR> = = <**MAIN RESERVIOR EQUALIZING PIPE TRANSDUCER (MREP).SYS><**113.787 PSI -142.233 PSI>

Diagnostic Code 60(Defective ER Transducer):

CCB.SYS.EXE

EQUALIZINGRESERVIOR.SYS

EQAULIZINGRESERVIORTRANSDUCER.SYS

AUTOMATICBRAKEVALVEHANDLE.SYS

CUTOUTRELAY.SYS

EQUALIZINGRESERVIORDEFAULTMAGNETVALVE.SYS

AW4-ER.SYS=ANALOG CONVERTOR EQUALIZING RESERVIOR.SYS

COUNTER.SYS

DEFECTIVEERTRANSDUCER.BAT

C><EQUALIZINGRESERVIORTRANSDUCER><BELOW 71 PSI OR ABOVE 74 PSI> = = <MESSAGE60><:AIR BRAKE FAILURE - USE LOCOMOTIVE IN TRAIL ONLY>

C><MESSAGE60> = =<EQUALIZINGRESERVIOR.SYS> <SKIPPED>

THEN

C><AUTOMATICBRAKEVALVEHANDLE<PENTALYAPPLICATION> = = <CUTOUTRELAY><DROPOUT>

C><EQUALIZINGRESERVIORDEFAULTMAGNETVALVE><OFF>

C><ANALOGCONVERTOREQUALIZINGRESERVIOR><DISABLED>

EM2000"AIR BRAKE FAILURE - - LOCOMOTIVE IN TRAIL ONLY"

DEFECTIVEERTRANSDUCER.BAT

ERRORCODEdiagnsoticcode60/DEFECTIVEERTRANSDUCER.BAT

C:AUTOERRORCODE.EXE COPY

C:/ERRORCODEdiagnosticcode60/DEFECTIVEERTRANSDUCER.BAT

FAULtCODE.1COM

FAULtCODE.1COM

FAULTCODE1 = DISCONNECTED

FAULTCODE2.COM

FAULTCODE2 = SHORTED (CLOSED) CIRCUIT

C:AUTOERRORCODE.EXE COPY

C:/ERRORCODEdiagnosticcode60/DEFECTIVEERTRANSDUCER.BAT

FAULTBIN BAT /V

THE TIME IS <SPACE>t_THE DATE IS <SPACE>d

C><FAULTCODE60><CLEAR> = = <LEAD/TRAILSWITCH><TRAIL>

OR

C><FAULTCODE60><CLEAR> = = <EQUALIZINGRERESERVIOR><IN RANGE>

THEN

C><AUTOMATICBRAKEVALVEHANDLE><CLEAR PENALTY APPLICATION> = = <AUTOMATICBRAKEVALVEHANDLE><FULL SERVICE>

THEN

C><AUTOMATICBRAKEVALVEHANDLE><FULLSERVICE> = = <COUNTER><TEN SECONDS>

THEN

C><AUTOMATICBRAKEVALVEHANDLE><RUN> = = <AUTOMATICBRAKEVALVEHANDLE><RELEASE>

C:\TROUBLESHOOT.EXE**Diagnostic Code 60(Defective ER Transducer**.TXT<OPEN TEXT VIEWER Y/N>

74PSI WGD4/WDP4 71PSI ALCO LOCO

PG 19

Equalizing reservoir (ER) pressure will be increased and maintained at 5.2 kg/cm2 (WGD4/WDP4 Loco) and 5 kg/cm2 (Alco Loco) ER pressure is maintained automatically by use of the ER Transducer's commands to AW4-ER's Supply and Exhaust magnet valves to either 'open' or 'close' when leakage is detected by the ER Transducer.

Diagnostic Code 61(ER Supply Magnet Valve Stuck Open):

CCB.SYS.EXE

EQUALIZINGRESERVIOR.SYS

EQAULIZINGRESERVIORTRANSDUCER.SYS

COUNTER.SYS

AW4-ER.SYS=ANALOG CONVERTOR EQUALIZING RESERVIOR.SYS

EQUALIZINGRESERVIORDEFAULTMAGNETVALVE.SYS

SUPPLYMAGNETVALVE.SYS

MAINRESERVIORPRESSURE

ADZBOARD.SYS

CUTOUTRELAY.SYS

ERSUPPLYMAGNETVAVLESTUCKOPEN.BAT

C><EQAULIZINGRESERVIOR><8PSI ABOVE 71-74PSI> = = <COUNTER> 8SECONDS>

THEN

C><COUNTER><GREATERTHAN8SECONDS> = = <<AW4-ER.SYS=ANALOG CONVERTOR EQUALIZING RESERVIOR.SYS/SUPPLYMAGNETVALVE><STUCK OPEN>

THEN

C><MESSAGE61>:EM2000"AIR BRAKE FAILURE - - USE LOCOMOTIVE IN TRAIL ONLY"<SPACE><ENTER.

C><AUTOMATICBRAKEHANDLE><PENALTYAPPLICATION> = = <CUTOUTRELAY><DROPOUT>

THEN

C><BRAKEPIPE><EXHAUST/SERVICEPOSITION> = = <EQUALIZINGRESERVIORDEFAULTMAGNETVALVE.SYS><DE-ENERGIZING>

THEN

C><EQUALIZINGRESERVIOR.SYS><SKIPPED>

C> IF <EQUALIZINGRESERVIOR.SYS><GREATERTHAN ONE PSI PER LOOP> = =

<MAINRESERVIOR.SYS><LESSTHAN78PSI>

C><ADZBOARD><FAILED>

C><EQAULIZINGRESERVIORTRANSDUCER><FAILED>

C><EQAULIZINFRESERVIOR><NO POWER.

C>IF <AW4-ER.SYS=ANALOG CONVERTOR EQUALIZING RESERVIOR.SYS/SUPPLYMAGNETVALVE><STUCK OPEN>

C><ANALOGCONVERTOREQUALIZINGRESERVIOR><DISABLED>

ERSUPPLYMAGNETVAVLESTUCKOPEN.BAT

ERRORCODEdiagnosticcode61/ERSUPPLYMAGNETVAVLESTUCKOPEN.BAT

C:AUTOERRORCODE.EXE COPY

C:ERRORCODEdiagnosticcode61/ERSUPPLYMAGNETVAVLESTUCKOPEN.BAT FAULTCODE1.COM

FAULTCODE1.COM

FAULTCODE1= AW4-ER.SYS=ANALOG CONVERTOR EQUALIZING RESERVIOR.SYS/SUPPLYMAGNETVALVE><STUCK OPEN>

C:AUTOERRORCODE.EXE COPY

C:ERRORCODEdiagnosticcode61/ERSUPPLYMAGNETVAVLESTUCKOPEN.BAT FAULTBIN.BAT /V

THE TIME IS <SPACE>t_THE DATE IS <SPACE>d

C:\TROUBLESHOOT.EXE**Diagnostic Code 61(ER Supply Magnet Valve Stuck Open):** .TXT<OPEN TEXT VIEWER Y/N>

C><FAULTCODE61><CLEAR> = = <AIRBRAKESELFTEST.EXE><PASS>

(No ER Supply):

EQUALIZINGRESERVIOR.SYS

COUNTER.SYS

AW4-ER.SYS=ANALOG CONVERTOR EQUALIZING RESERVIOR.SYS

SUPPLYMAGNETVALVE.SYS

MAINRESERVIOR.SYS

CUTOUTRELAY.SYS

ADZBOARD.SYS

NOERSUPPLY.BAT

C><EQAULIZINGRESERVIOR><8PSI BELOW 71-74PSI> = = <COUNTER> 8SECONDS>

THEN

C><COUNTER><GREATERTHAN8SECONDS> = = <<AW4-ER.SYS=ANALOG CONVERTOR EQUALIZING RESERVIOR.SYS/SUPPLYMAGNETVALVE><STUCK CLOSE>

THEN

C><MESSAGE62>:EM2000"AIR BRAKE FAILURE - - USE LOCOMOTIVE IN TRAIL ONLY"<SPACE><ENTER.

C><AUTOMATICBRAKEHANDLE><PENALTYAPPLICATION> = = <CUTOUTRELAY><DROPOUT>

THEN

C><BRAKEPIPE><EXHAUST/SERVICEPOSITION> = = <EQUALIZINGRESERVIORDEFAULTMAGNETVALVE.SYS><DE-ENERGIZING>

THEN

C><EQUALIZINGRESERVIOR.SYS><SKIPPED>

C> IF <EQUALIZINGRESERVIOR.SYS><GREATERTHAN ONE PSI PER LOOP> = = <MAINRESERVIOR.SYS><LESSTHAN78PSI>

C><ADZBOARD><FAILED>

C><EQAULIZINGRESERVIORTRANSDUCER><FAILED>

C><EQAULIZINFRESERVIOR><NO POWER.

C>IF <AW4-ER.SYS=ANALOG CONVERTOR EQUALIZING RESERVIOR.SYS/SUPPLYMAGNETVALVE><STUCK CLOSED>

C><ANALOGCONVERTOREQUALIZINGRESERVIOR><DISABLED>

NOERSUPPLY.BAT

ERRORCODEdiagnosticcode62/NOERSUPPLY.BAT

C:AUTOERRORCODE.EXE COPY

C:/ERRORCODEdiagnosticcode62/NOERSUPPLY.BAT FAULTCODE1.COM

FAULTCODE1 = AW4-ER.SYS=ANALOG CONVERTOR EQUALIZING RESERVIOR.SYS/SUPPLYMAGNETVALVE<STUCK CLOSED>

C:AUTOERRORCODE.EXE COPY

C:/ERRORCODEdiagnosticcode62/NOERSUPPLY.BAT FAULTBIN.BAT /V

THE TIME IS <SPACE>t_THE DATE IS <SPACE>d

C:\TROUBLESHOOT.EXE**Diagnostic Code 62(No ER Supply):** .TXT<OPEN TEXT VIEWER Y/N>

C><FAULTCODE62><CLEAR> = = <AIRBRAKESELFTEST.EXE><PASS>

Diagnostic Code 63(No ER Exhaust)

EQUALIZINGRESERVIOR.SYS

COUNTER.SYS

EXHAUSTMAGNETVALVE.SYS

AW4-ER.SYS=ANALOG CONVERTOR EQUALIZING RESERVIOR.SYS

MAINRESERVIOR.SYS

ADZBOARD.SYS

EQUALIZINGRESERVIORTRANSDUCER.SYS

CUTOUTRELAY.SYS

EQUALIZINGRESERVIORDEFAULTMAGNETVALVE.SYS

AUTOMATICBRAKEVAVLEHANDLE.SYS

NOEREXHAUST.BAT

C><EQAULIZINGRESERVIOR><8PSI ABOVE 71-74PSI> = = <COUNTER> 8SECONDS>

C><COUNTER><GREATERTHAN8SECONDS> = = <<AW4-ER.SYS=ANALOG CONVERTOR EQUALIZING RESERVIOR.SYS/SUPPLYMAGNETVALVE><STUCK CLOSED>

C><MESSAGE63>:EM2000"AIR BRAKE FAILURE - - USE LOCOMOTIVE IN TRAIL ONLY"<SPACE><ENTER.

C><AUTOMATICBRAKEHANDLE><PENALTYAPPLICATION> = = <CUTOUTRELAY><DROPOUT>

THEN

C><BRAKEPIPE><EXHAUST/SERVICEPOSITION> = = <EQUALIZINGRESERVIORDEFAULTMAGNETVALVE.SYS><DE-ENERGIZING>

THEN

C><EQUALIZINGRESERVIOR.SYS><SKIPPED>

C> IF <EQUALIZINGRESERVIOR.SYS><GREATERTHAN ONE PSI PER LOOP> = = <MAINRESERVIOR.SYS><LESSTHAN78PSI>

C><ADZBOARD><FAILED>

C><EQAULIZINGRESERVIORTRANSDUCER><FAILED>

C><EQAULIZINFRESERVIOR><NO POWER.

C>IF <AW4-ER.SYS=ANALOG CONVERTOR EQUALIZING RESERVIOR.SYS/SUPPLYMAGNETVALVE><STUCK CLOSED>

C><ANALOGCONVERTOREQUALIZINGRESERVIOR><DISABLED>

NOEREXHAUST.BAT

ERRORCODEdiagnosticcode63/ENOEREXHAUST.BAT

C:/AUTOERRORCODE.EXE COPY

C:/ERRORCODEdiagnosticcode63/NOEREXHAUST.BAT FAULTCODE1.COM

FAULTCODE1 = AW4-ER.SYS=ANALOG CONVERTOR EQUALIZING RESERVIOR.SYS/SUPPLYMAGNETVALVE<STUCK CLOSED>

C:/AUTOERRORCODE.EXE COPY

C:/ C:/ERRORCODEdiagnosticcode63/NOEREXHAUST.BAT FAULTBIN.BAT /V

THE TIME IS <SPACE>t_THE DATE IS <SPACE>d

C:\TROUBLESHOOT.EXE**Diagnostic Code 63(No ER EXHAUST):** .TXT<OPEN TEXT VIEWER Y/N>

C><FAULTCODE63><CLEAR> = = <AIRBRAKESELFTEST.EXE><PASS>

Diagnostic Code 64(Brake Pipe Cut-Off Valve Stuck Open):

EQUALIZINGRESERVIORDEFAULTMAGNETVALVE.SYS

COUNTER.SYS

EQUALIZINGRESERVIOR.SYS

BRAKEPIPECUTOUTVALVE.SYS

MAINRESERVIOR.SYS

ADZBOARD.SYS

EQUALIZINGRESERVIORTRANSDUCER.SYS

BRAKEPIPECUTOFFPILOTMAGNETVALVE.SYS

LEAD/TRAILSWITCH.SYS

BRAKEPIPECUTOFFVAVLESTUCKOPEN.BAT

C><EQAULIZINGRESERVIOR><PRESSURE 5 PSI BELOW 71-74PSI> = = <EQUALIZINGRESERVIORDEFAULTMAGNETVALVE><DE-ENERGIZED DURATION 8SECONDS>

THEN

C><BRAKEPIPECUTOFFPILOTVALVE><REMAINS OPEN> = = <MESSAGE64>EM2000 "AIR BRAKE CUT OFF FAILURE - USE LOCOMOTIVE IN LEAD MODE ONLY"<SPACE><ENTER>

C><BRAKEPIPECUTOFFPILOTVALVE><REMAINS OPEN> !!!WARNING BRAKE PIPE CUT OFF VALVE STUCK OPEN!!!!<SPACE><ENTER>

C>SKIP <ERRORCODEdiagnosticcode64/BRAKEPIPECUTOFFVAVLESTUCKOPEN.BAT>

C> if <MAINRESERVIOR.SYS><LESSTHAN78PSI>

C><ADZBOARD><FAILED>

C><EQAULIZINGRESERVIORTRANSDUCER><FAILED>

C>OVERRIDE><ERRORCODEdiagnosticcode64/BRAKEPIPECUTOFFVAVLESTUCKOPEN.BAT> = = <BRAKEPIPECUTOFFPILOTMAGNETVALVE<STUCK OFF>

C><BRAKEPIPECUTOFFPILOTMAGNETVALVE><STUCKOFF> = = <LEAD/TRAIL> LEAD

BRAKEPIPECUTOFFVAVLESTUCKOPEN.BAT

ERRORCODEdiagnosticcode64/BRAKEPIPECUTOFFVAVLESTUCKOPEN.BAT

C:/AUTOERRORCODE.EXE COPY

C:/ERRORCODEdiagnosticcode64/BRAKEPIPECUTOFFVAVLESTUCKOPEN.BAT FAULTCODE1.COM

FAULTCODE1 = MECHANICAL FAILURE BRAKE PIPE CUT OFF VALVE

FAULTCODE2.COM

FAULTCODE2 = FAULTY WIRING

C:/AUTOERRORCODE.EXE COPY

C:/ERRORCODEdiagnosticcode64/BRAKEPIPECUTOFFVAVLESTUCKOPEN.BAT FAULTBIN.BAT /V

THE TIME IS <SPACE>t_THE DATE IS <SPACE>d

C:\TROUBLESHOOT.EXE**Diagnostic Code 64(Brake Pipe Cut-Off Valve Stuck Open):**.TXT<OPEN TEXT VIEWER Y/N>

C><FAULTCODE64><CLEAR> = = <BRAKEPIPECUTOUTVALVE><CLOSED>

Diagnostic Code 65(Brake Pipe Cut-Off Valve Stuck Closed):

EQUALIZINGRESERVIOR.SYS

EQUALIZINGRESERVIORDEFAULTMAGNETVALVE.SYS

BRAKEPIPECUTOFFPILOTMAGNETVALVE.SYS

COUNTER.SYS

ADZBOARD.SYS

EQUALIZINGRESERVIORTRANSDUCER.SYS

MAINRLEAD/TRAILSWITCH.SYS

BRAKEPIPECUTOUTVALVE.SYS

BRAKEPIPECUTOFFVAVLESTUCKCLOSED.BAT

C><EQAULIZINGRESERVIOR><PRESSURE 15 PSI ABOVE 71-74PSI> = = <EQUALIZINGRESERVIORDEFAULTMAGNETVALVE><ENERGIZED DURATION 8SECONDS>

THEN

C><BRAKEPIPECUTOFFPILOTMAGNETVALVE><DE-ENERGIZED 8SECOONDS> = = <BRAKEPIPECUTOUTVALVE><CLOSED>

C>><BRAKEPIPECUTOFFPILOTVALVE><REMAINS CLOSED> = = <MESSAGE65:>EM2000"AIR BRAKE FAILURE - USE LOCOMOTIVE IN TRAIL ONLY"<SPACE><ENTER>

C><BRAKEPIPECUTOFFPILOTVALVE><REMAINS CLOSED> !!!WARNING BRAKE PIPE CUT OFF VALVE STUCK CLOSED!!!!<SPACE><ENTER>

C>SKIP <ERRORCODEdiagnosticcode65/BRAKEPIPECUTOFFVAVLESTUCKCLOSED.BAT>

C> if <MAINRESERVIOR.SYS><LESSTHAN78PSI>

C><ADZBOARD><FAILED>

C><EQAULIZINGRESERVIORTRANSDUCER><FAILED>

BRAKEPIPECUTOFFVAVLESTUCKCLOSED.BAT

ERRORCODEdiagnostic65/BRAKEPIPECUTOFFVAVLESTUCKCLOSED.BAT

C:AUTOERRORCODE.EXE COPY

C:/ERRORCODEdiagnostic65/BRAKEPIPECUTOFFVAVLESTUCKCLOSED.BAT FAULTCODE1.COM

FAULTCODE1 = MECHANICAL FAILURE OF BRAKE PIPE CUTOFF VALVE

FAULTCODE2.COM

FAULTCODE2 = FAULTY WIRING

C:AUTOERRORCODE.EXE COPY

C:/ERRORCODEdiagnostic65/BRAKEPIPECUTOFFVAVLESTUCKCLOSED.BAT FAULTBIN.BAT /V

THE TIME IS <SPACE>t_THE DATE IS <SPACE>d

C:\TROUBLESHOOT.EXE**Diagnostic Code 65(Brake Pipe Cut-Off Valve Stuck CLOSED):**.TXT<OPEN TEXT VIEWER Y/N>

C><FAULTCODE64><CLEAR> = = <BRAKEPIPECUTOUTVALVE><OPEN>

(MV53 Stuck Off):

BRAKEPIPECUTOFFPILOTMAGNETVALVE.SYS

COUNTER.SYS

BRAKEPIPECUTOFFVALVE.SYS

MAINRESERVIOR

ADZBOARD.SYS

EQUALIZINGRESERVIORTRANSDUCER

LEAD/TRAILSWITCH.SYS

MV53STUCKOFF.BAT

C><BRAKEPIPECUTOFFPILOTMAGNETVALVE><ON / 8SECONDS> = = <BRAKEPIPECUTOFFVALVE><OPEN>

C><BRAKEPIPECUTOFFPILOTMAGNETVALVE><STUCKOFF> = = <MESSAGE66>:EM2000 "AIR BRAKE CUT OFF FAILURE- USE LOCOMOTIVE IN LEAD MODE ONLY"

OR

C><BRAKEPIPECUTOFFVALVE><STUCKOPEN>= = <MESSAGE66>:EM2000 "AIR BRAKE CUT OFF FAILURE- USE LOCOMOTIVE IN LEAD MODE ONLY"

C><MESSAGE66><DISPLAYED> !!!WARNING BRAKE PIPE CUT OFF PILOT MAGNET VALVE STUCK OFF!!!<SPACE><ENTER

THEN

C>SKIP <ERRORCODEdiagnosticcode66/MV53STUCKOFF.BAT>

C> if <MAINRESERVIOR.SYS><LESSTHAN78PSI>

C><ADZBOARD><FAILED>

C><EQAULIZINGRESERVIORTRANSDUCER><FAILED>

MV53STUCKOFF.BAT

ERRORCODEdiagnsoticcode66/MV53STUCKOFF.BAT

C:AUTOERRORCODE.EXE COPY

C:ERRORCODEdiagnsoticcode66/MV53STUCKOFF.BAT FAULTCODE1.COM

FAULTCODE1 =BRAKE PIPE CUT OFF MAGNET STUCK OFF

FAULTCODE2.COM

FAULTCODE2 = BRAKE PIPE CUT OFF VALVE STUCK OPEN

C:AUTOERRORCODE.EXE COPY

C:ERRORCODEdiagnsoticcode66/MV53STUCKOFF.BAT FAULTBIN.BAT /V

THE TIME IS <SPACE>t_THE DATE IS <SPACE>d

C:\TROUBLESHOOT.EXE**Diagnostic Code 66(MV53 Stuck Off):** .TXT<OPEN TEXT VIEWER Y/N>

C><FAULTCODE66><CLEAR>

C><BRAKEPIPECUTOFFVALVE><CLOSE> =
=<BRAKEPIPECUTOFFPILOTMAGNETVALVE><ON>

Diagnostic Code 69(Defective BP Transducer):

CCB.SYS.EXE

BRAKEPIPETRANSDUCER.SYS <72.54PSI>

LEAD/TRAILSWITCH.SYS

AUTOMATICBRAKEVALVEHANDLE.SYS

CUTOUTRELAY.SYS

BRAKEPIPE.SYS

INDEPENDENTBRAKECYLINDER.SYS

COUNTER.SYS

DEFECTIVEBPTRANSDUCER.BAT

C><BRAKEPIPETRANSDUCER><OUTSIDE THE RANGE 72.54PSI> = = <MESSAGE69:EM2000"AIR BRAKE FAILURE- LOCOMOTIVE IN TRAIL ONLY">!!! WARNING DEFECTIVE BRAKE PIPE TRANSDUCER!!!<SPACE><ENTER>

C>IF <LEAD/TRAILSWITCH><LEADIN MODE> = = <AUTOMATICBRAKEVALVEHANDLE><PENALTYAPPLICATION>

C<AUTOMATICBRAKEVALVEHANDLE>PENALTYAPPLICATION> = = <CUTOUTVALVE><DROP>

C><BRAKEPIPE><EXHAUST IN SERVICE POSITION>

C> IF <LEAD/TRAILSWITCH><LEADOUT MODE> = = <AUTOMATICBRAKECYLINDER><REDUCED TO 0PSI>

THEN

C><AUTOMATICBRAKE><RATIO = = <INDEPENDENTBRAKECYLINDER><RATIO>

C> IF <LEAD/TRAILSWITCH><TRAIL MODE> = = <FAULTCODE69><CLEAR>

C><FAULTCODE69><CLEAR> = = <LEADIN/LEADOUT>

THEN

C><AUTOMATICBRAKEHANDLEVALVE><APPLIED> = = <INDEPENDENTBRAKECYLINDER><RATIO>

C><FAULTCODE69><CLEAR> = = <BRAKEPIPETRANSDUCER><VALIDLIMITS>

C><RESET> Y/N

C>AUTOMATICBRAKEVALVEHANDLE<FULLSERVICE>==<COUNTER><TENSECONDS>

THEN

C><AUTOMATICBRAKEVALVEHANDLE><RUN/RELEASE POSITION>

DEFECTIVEBPTRANSDUCER.BAT

ERRORCODEdiagnosticcode69/DEFECTIVEBPTRANSDUCER.BAT

C:AUTOERRORCODE.EXE COPY

C:ERRORCODEdiagnosticcode69/DEFECTIVEBPTRANSDUCER.BAT

FAULTCODE1.COM

FAULTCODE1=DISCONNECTION

FAULTCODE2.COM

FAULTCODE2=SHORTED(CLOSED)CIRCUIT TRANSDUCER/CONNECTOR

C:AUTOERRORCODE.EXE COPY

C:ERRORCODEdiagnosticcode69/DEFECTIVEBPTRANSDUCER.BAT
FAULTBIN.BAT /V

THE TIME IS <SPACE>t_THE DATE IS <SPACE>d

C:\TROUBLESHOOT.EXE**Diagnostic Code 69(Defective BP Transducer):**

.TXT<OPEN TEXT VIEWER Y/N>

Diagnostic Code 6A(Brake Pipe Control Failure):

BRAKEPIPE.SYS

EQUALIZING RESERVIOR.SYS

EQUALIZING RESERVIORTRANSDUCER.SYS

CCB.EXE

C><AIRBRAKESELFTEST.EXE>

C:AIRBRAKESELFTEST

BRAKEPIPECONTROLFAILURE.BAT

ERRORCODEdiagnosticcode6A/BRAKEPIPECONTROLFAILURE.BAT

ERRORCODEdiagnosticcode6A/BRAKEPIPECONTROLFAILURE.EXE

NOTE DIAGNOSTICCODE ONLY LOGS IN SELFTEST

C><BRAKEPIPE><PRESSURE 5 +/- PSI> = = <EQUALIZING RESERVIOR>

c:AIRBRAKESELFTEST

C><BRAKEPIPE><PRESSURE 5 +/- PSI> = = <EQUALIZING RESERVIOR>

THEN

FINDS

C<EQUALIZINGRESERVIOR><NORMAL> = = <EQUALIZINGRESERVIOR><CHARGES 79.75PSI IN 10SECONDS>

CHECKS

C><BRAKEPIPE><+/- 5PSI> = = <EQUALIZING RESERVIORTRANSDUCER><PASS>

THEN

C> <CCB.SYS>==<EQUALIZINGRESERVIOR><RELEASES 30PSI IN 10SECONDS>

CHECKS

C>BRAKEPIPE><+/- 5PSI> = = <EQUALIZING RESERVIORTRANSDUCER><PASS>

C>BRAKEPIPE><GREATER THAN OR LESS THEN +/- 5PSI > = = <EQUALIZING RESERVIORTRANSDUCER><FAIL>

C:IF AIRBRAKESELFTEST

C><BRAKEPIPE><FAIL> = = <EQUALIZING RESERVIORTRANSDUCER><FAIL>

THEN

C><MESSAGE6A: EM2000"AIRBRAKE FAILURE -USE LOCOMOTIVE IN TRAIL ONLY">!!!WARNING BRAKE PIPE CONTROL FAILURE!!!<SPACE><ENTER>

BRAKEPIPECONTROLFAILURE.BAT

ERRORCODEdiagnosticcode6A/BRAKEPIPECONTROLFAILURE.BAT

C:/AUTOERRORCODE.EXE COPY

C:/ERRORCODEdiagnosticcode6A/BRAKEPIPECONTROLFAILURE.BAT FAULTCODE1.COM

FAULTCODE1= DISCONNECTION EQUALIZING RESERVIOR DEFAULT MAGNET VALVE WIRE

C:/AUTOERRORCODE.EXE COPY

C:/ERRORCODEdiagnosticcode6A/BRAKEPIPECONTROLFAILURE.BAT FAULTBIN.BAT /V

THE TIME IS <SPACE>t_THE DATE IS <SPACE>d

C:\TROUBLESHOOT.EXE**Diagnostic Code 6A(Brake Pipe Control Failure):**.TXT<OPEN TEXT VIEWER Y/N>

C<FAULTCODE6A><CLEAR> = = <AIRBRAKESELFTEST.EXE><PASS>

Diagnostic Code 6B(Brake Pipe Leakage Failure):

EQUALIZINGRESRVIOR.SYS

BRAKEPIPE.SYS

BRAKEPIPETRANSDUCER.SYS

COUNTER.SYS

CCB.EXE/AIRBRAKESELFTEST.EXE

CHECKS

BRAKEPIPELEAKAGEFAILURE.BAT

C><EQUALIZINGRESERVIOR><CHARGING> = = <BRAKEPIPE><CHARGING>

THEN

C><COUNTER><10SECONDS> = = <BRAKEPIPETRANSDUCER><VALUE>

C> IF <BRAKEPIPETRANSDUCER><VALUE IS NOT WITHIN +/- 5PSI> = = <CUTOFF>

THEN

C>ERRORCODEdiagnosticcode6B/BRAKEPIPELEAKAGEFAILURE.BAT

C:/AUTOERRORCODE.EXE COPY

C:/ERRORCODEdiagnosticcode6B/BRAKEPIPELEAKAGEFAILURE.BAT

FAULTCODE1.COM

FAULTCODE1 = CHECK ALL END COCKS FOR CLOSURE

FAULTCODE2.COM

FAULTCODE2 = SOAP ALL FITTINGS BRAKE PIPE SYSTEM

C:/AUTOERRORCODE.EXE COPY

C:/ERRORCODEdiagnosticcode6B/BRAKEPIPELEAKAGEFAILURE.BAT

FAULTBIN.BAT /V

THE TIME IS <SPACE>t_THE DATE IS <SPACE>d

C:\TROUBLESHOOT.EXE**Diagnostic Code 6B(Brake Pipe Leakage Failure):**.TXT<OPEN TEXT VIEWER Y/N>

C><FAULTCODE6B><CLEARS> = = <AIRBRAKESELFTEST.EXE><PASS>

Diagnostic Code 6C(PVBP Stuck Open):

BYPASSMAGNETVALVE.SYS

COUNTER.SYS

BYPASSPNEUMATICVALVE.SYS

AUTOMATICBRAKEVALVEHANDLE.SYS

CCB.EXE

C>AIRBRAKESELFTEST.EXE>

C:AIRBRAKESELFTEST

BYPASSPNEUMATICVAVLESTUCKOPEN.BAT

ERRORCODEdiagnosticcode6C/BYPASSPNEUMATICVAVLESTUCKOPEN.BAT

ERRORCODEdiagnosticcode6C/BYPASSPNEUMATICVAVLESTUCKOPEN.EXE

NOTE DIADNOSTICCODE ONLY LOGS IN SELF TEST

**C><BYPASSMAGNETVALVE><OFF DURATION 8SECONDS> = =
<BYPASSPNEUMATICVALVE><OPEN>**

THEN

**C><MESSAGE6C:>!!!WARNING BYPASSPNEUMATICVALVE STUCK OPEN!!!
<SPACE><ENTER>**

BYPASSPNEUMATICVAVLESTUCKOPEN.BAT

ERRORCODEdiagnosticcode6C/BYPASSPNEUMATICVAVLESTUCKOPEN.BAT

C:/AUTOERRORCODE.EXE COPY

C:/ERRORCODEdiagnosticcode6C/BYPASSPNEUMATICVAVLESTUCKOPEN.BAT

FAULTCODE1.COM

FAULTCODE1 = OPEN CIRCUIT IN BYPASS PNEUMATIC VALVE

C:/AUTOERRORCODE.EXE COPY

C:/ERRORCODEdiagnosticcode6C/BYPASSPNEUMATICVAVLESTUCKOPEN.BAT
FAULTBIN.BAT /V

THE TIME IS <SPACE>t_THE DATE IS <SPACE>d

C:\TROUBLESHOOT.EXE**Diagnostic Code 6C(PVBP Stuck Open):** .TXT<OPEN TEXT VIEWER Y/N>

C<FAULTCODE6C><CLEAR> = = <**BYPASSMAGNETVALVE><OFF>**

THEN

C><BYPASSPNEUMATICVALVE><CLOSED>

C><BYPASSMAGNETVALVE><OFF> = = <AUTOMATICBRAKEVALVEHANDLE><ALL POSITIONS EXCEPT SPRING LOADED RELEASE>

Diagnostic Code 6D(PVBP Stuck Closed):

BYPASSMAGNETVALVE.SYS

COUNTER.SYS

BYPASSPNEUMATICVALVE.SYS

AUTOMATICBRAKEVALVEHANDLE.SYS

CCB.EXE

C>AIRBRAKESELFTEST.EXE>

C:AIRBRAKESELFTEST

BYPASSPNEUMATICVAVLESTUCKCLOSED.BAT

ERRORCODEdiagnosticcode6D/BYPASSPNEUMATICVAVLESTUCKCLOSED.BAT

ERRORCODEdiagnosticcode6D/BYPASSPNEUMATICVAVLESTUCKCLOSED.EXE

**C><BYPASSMAGNETVALVE><ON DURATION 8SECONDS> = =
<BYPASSPNEUMATICVALVE><CLOSED>**

THEN

**C><MESSAGE6D:>!!!WARNING BYPASSPNEUMATICVALVE STUCK CLOSED!!!
<SPACE><ENTER>**

BYPASSPNEUMATICVAVLESTUCKCLOSED.BAT

ERRORCODEdiagnosticcode6D/BYPASSPNEUMATICVAVLESTUCKCLOSED.BAT

C:/AUTOERRORCODE.EXE COPY

**C:/ERRORCODEdiagnosticcode6D/BYPASSPNEUMATICVAVLESTUCKCLOSED.BAT
FAULTCODE1.COM**

FAULTCODE1=HIGH CAPACITY BRAKE PIPE CHARGE

C:/AUTOERRORCODE.EXE COPY

**C:/ERRORCODEdiagnosticcode6D/BYPASSPNEUMATICVAVLESTUCKCLOSED.BAT
FAULTBIN.BAT /V**

THE TIME IS <SPACE>t_THE DATE IS <SPACE>d

C:\TROUBLESHOOT.EXE**Diagnostic Code 6D(PVBP Stuck Closed):** .TXT<OPEN TEXT VIEWER Y/N>

C<FAULTCODE6D><CLEAR> = = <**BYPASSMAGNETVALVE><ON>**

THEN

C><BYPASSPNEUMATICVAVLE><OPEN>

C><BYPASSMAGNETVALVE><ON> == <AUTOMATICBRAKEVALVEHANDLE><SPRING-LOADED RELEASE POSITION>

Diagnostic Code 6E(MVEM Stuck Off):

EMERGENCYMAGNETVALVE.SYS

EQUALIZINGRESERVIOR.SYS

BRAKEPIPE.SYS

BRAKEPIPECUTOFFVALVE.SYS

COUNTER.SYS

BRAKEPIPETRANSDUCER.SYS

CCB.EXE

C>AIRBRAKESELFTEST.EXE>

C:AIRBRAKESELFTEST

EMERGENCYMAGNETVALVE.BAT

ERRORCODEdiagnsoticcode6E/EMERGENCYMAGNETVALVE.BAT

ERRORCODEdiagnsoticcode6E/EMERGENCYMAGNETVALVE.EXE

NOTE DIAGNOSTICCODE ONLY LOGS IN SELFTEST

CHECKS

C<EQUALIZINGRESERVIOR><NORMAL> = = <BRAKEPIPETRANSDUCER><CHARGES 79.75PSI >

THEN

C><BRAKEPIPECUTOFFVALVE>< /W 1 SECOND> == <EMERGENCYMAGNETVALVE><ENERGIZES>

THEN /W 4 SECONDS

CHECK

C><BRAKEPIPETRANSDUCER><VALUE>

C> IF <BRAKEPIPE><PRESSURE VALUE IS NOT BELOW 20PSI> = =

<DIAGNOSTICCODE6E><LOGS>

THEN

C><EMERGENCYMAGNETVALVE><DE-ENERGIZED> = = <MESSAGE6E:EM2000"AIR BRAKE FAILURE - USE LOCOMOTIVE IN TRAIL ONLY">!!!WARNING EMERGENCY MAGNET VALVLE STUCK OFF!!!<SPACE><ENTER>

EMERGENCYMAGNETVALVE.BAT

ERRORCODEdiagnsoticcode6E/EMERGENCYMAGNETVALVE.BAT

C:/AUTOERRORCODE.EXE COPY

C:/ERRORCODEdiagnsoticcode6E/EMERGENCYMAGNETVALVE.BAT

FAULTCODE1.COM

FAULTCODE1 = OPEN CIRCUIT IN EMERGENCYMAGNETVALVE

C:/AUTOERRORCODE.EXE COPY

C:/ERRORCODEdiagnsoticcode6E/EMERGENCYMAGNETVALVE.BAT

FAULTBIN.BAT /V

THE TIME IS <SPACE>t_THE DATE IS <SPACE>d

C:\TROUBLESHOOT.EXE**Diagnostic Code 6E(MVEM Stuck Off):**.TXT<OPEN TEXT VIEWER Y/N>

C<FAULTCODE6E><CLEAR> = = <AIRBRAKESELFTEST.EXE><PASS>

Diagnostic Code 70(Defective 20 Transducer)

CCB.EXE.SYS

2OTRANSDUCER.SYS

LEAD/TRAILSWITCH.SYS

BRAKECYLINDEREQUALIZINGPIPE.SYS

ANALOGCONVERTER20RESERVIOR.SYS

AUTOMATICHANDLEVALVE.SYS

CUTOUTRELAY.SYS

EQUALIZINGRESERVIORMAGNETVALVE.SYS

BRAKECYLINDER.SYS

BAILOFFSWITCHINDEPENDENTBRAKE.SYS

DEFECTIVE20TRANSDUCER.BAT

C><20TRANSDUCER><OUTSIDEVALIDRANGE> = = <MESSAGE70:EM2000"AIR BRAKE FAILURE- USE LOCOMOTIVE IN TRAIL ONLY">!!!WARNING DEFECTIVE 20 TRANSDUCER!!!<SPACE><ENTER>

C>IF<LEAD/TRAILSWITCH>LEAD> = = <BRAKECYLINDEQAULIZINGPIPE><CUT-OFF>

C><ANALOGCONVERTER20RESERVIOR><DISALBED>

C><AUTOMAITCBRAKEVALVEHANDLE>PENALTYAPPLICATION> = = <CUTOUTRELAY><DROPOUT>

C><BRAKEPIPE><EXHAUST AT SERVICE> = = <EQUALIZINGRESERVIORMAGNETVALVE><DE-ENERGIZED>

C><EQUALIZINGRESERVIORMAGNETVALVE><DE-ENERGIZED> = = <BRAKECYLINDEREQUALIZINGPIPE><ACTIVATE>

THEN

C><BRAKECYLINDEREQUALIZINGPIPECIRCUIT><ACTIVATE>

C><BRAKECLYINDER> = = <BRAKECYLINDEREQUALIZINGPIPE>

C>IF<LEAD/TRAILSWITCH><LEADOUT> = =
<BRAKECYLINDEREQUALIZINGPIPE><CUTOFF>

C><ANALOGCONVERTER20RESERVIOR><DISABLED>

C>IF<LEAD/TRAILSWITCH><TRAIL> = = <BRAKECYLINDER>PRESSURE BUILT ONLY BY BRAKEPIPE REDUCTIONS>

THEN

C> <BAILOFFSWITCHINDEPENDENTBRAKE><NOT AVAILABLE>

DEFECTIVE20TRANSDUCER.BAT

c>ERRORCODEdiagnosticcode70/DEFECTIVE20TRANSDUCER.BAT

C:/AUTOERRORCODE.EXE COPY

C:/ERRORCODEdiagnosticcode70/DEFECTIVE20TRANSDUCER.BAT

FAULTCODE1.COM

FAULTCODE1 = DISCONNECTED OPEN CIRCUIT

FAULTCODE2.COM

FAULTCODE2 = SHORTED(CLOSED CIRCUIT) TRANSDUCER/CONNECTORS

C:/AUTOERRORCODE.EXE COPY

C:/ERRORCODEdiagnosticcode70/DEFECTIVE20TRANSDUCER.BAT

FAULTBIN.BAT /V

THE TIME IS <SPACE>t_THE DATE IS <SPACE>d

C:\TROUBLESHOOT.EXE**Diagnostic Code 70(Defective 20 Transducer)**

.TXT<OPEN TEXT VIEWER Y/N>

C><FAULTCODE70><CLEARED> = = <2OTRANSDUCER><WITHIN VALID LIMITS>

C><RESET Y/N?>

C>AUTOMATICBRAKEVALVEHANDLE<FULLSERVICE> /W 10SECONDS

THEN

C>AUTOMATICBRAKEVALVEHANDLE<RUN OR RELEASE>

Diagnostic Code 71(20 Supply Magnet Valve Stuck Open):

20RESERVIOR.SYS

ANALOGCONVERTER20RESERVIOR.SYS

SUPPLYMAGNETVALVE.SYS

MAINRESERVIOR.SYS

ADZVBOARD.SYS

20TRANSDUCER.SYS

BRAKECYLINDEREQUALIZINGPIPE.SYS

CUTOUTRELAY.SYS

AUTOMATICBRAKEVALVEHANDLE.SYS

EQUALIZINGRESERVIORMAGNETVALVE.SYS

LEADTRAILSWITCH.SYS

BRAKECYLINDER.SYS

20SUPPLYMAGNETVALVESTUCKOPEN.BAT

C><20RESERVIOR> <8PSI OVERPRESSURE FOR 8 SECONDS>

C><ANALOGCONVERTER20RESERVIOR> = = <SUPPLYMAGNETVALVE><OPEN>

C><SUPPLYMAGNETVALVE><OPEN> = = <MESSAGE71:"AIR BRAKE FAILURE - USW LOCOMOTIVE IN TRAIL ONLY">!!!WARNING 20 SUPPLY MAGNET VALVE STUCK OPEN<SPACE><ENTER>

ERRORCODEdiagnostic71/20SUPPLYMAGNETVALVESTUCKOPEN.BAT

SKIP

C><ANALOGCONVERTER20RESERVIOR> <MORE THAN 1 PSI PER LOOP>

C><MAINRESERVIOR>IS LESS THAN 78 PSI>

C><ADZBOARD><FAILED>

C><20TRANSDUCER><FAILED>

C><20PIPE><NO CURRENT>

C> IF <LEAD/TRAIL> <LEADIN> = = <BRAKECYLINDEREQUALIZINGPIPE><CUTOFF>

C><ANALOGCONVERTER20RESERVIOR><DISALBLED>

THEN

C><AUTOMATICBRAKEVALVEHANDLE><PENALTYAPPLICATION> = = <CUTOUTRELAY><DROPOUT>

C><BRAKEPIPE><EXHAUST> = = ><AUTOMATICBRAKEVALVEHANDLE><SERVICE APPLICATION>

C>><AUTOMATICBRAKEVALVEHANDLE><SERVICE APPLICATION> = = <EQUALIZINGRESERVIORMAGNETVALVE><DE-ENERGIZED>

C>= <EQUALIZINGRESERVIORMAGNETVALVE><DE-ENERGIZED> = = <BRAKEEQUALIZINGCIRCUIT><BACKUP>

C><BRAKECYLINDER> = = <BRAKEPIPEEQUALIZINGPIPE

C>IF <LEAD/TRAIL><LEADOUT> = = <BRAKEPIPEEQUALIZINGPIPE><CUTOFF>

C><ANALOGCONVERTER20RESERVIOR><DISABLED>

20SUPPLYMAGNETVALVESTUCKOPEN.BAT

C>ERRORCODEdiagnostic71/20SUPPLYMAGNETVALVESTUCKOPEN.BAT

C:/AUTOERRORCODE.EXE COPY

C:/ERRORCODEdiagnostic71/20SUPPLYMAGNETVALVESTUCKOPEN.BAT FAULTCODE1.COM

C:/AUTOERRORCODE.EXE COPY

C:/ERRORCODEdiagnostic71/20SUPPLYMAGNETVALVESTUCKOPEN.BAT FAULTBIN.BAT /V

THE TIME IS <SPACE>t_THE DATE IS <SPACE>d

C:\TROUBLESHOOT.EXE**Diagnostic Code 71(20 Supply Magnet Valve Stuck Open):**.TXT<OPEN TEXT VIEWER Y/N>

C><FAULTCODE71><CLEAR> = = <AIRBRAKESELFTEST.EXE><PASS>

Diagnostic Code 72(No 20 Supply)

20RESERVIOR.SYS

ANALOGCONVERTER20RESERVIOR.SYS

SUPPLYMAGNETVALVE.SYS

MAINRESERVIOR.SYS

ADZVBOARD.SYS

20TRANSDUCER.SYS

LEADTRAILSWITCH.SYS

BRAKECYLINDEREQUALIZINGPIPE.SYS

AUTOMATICBRAKEVALVEHANDLE.SYS

CUTOUTRELAY.SYS

EQUALIZINGRESERVIORMAGNETVALVE.SYS

NO20SUPPLY.BAT

C><20RESERVIOR> <8PSI UNDERPRESSURE FOR 8 SECONDS>

C><ANALOGCONVERTER20RESERVIOR> = = <SUPPLYMAGNETVALVE><CLOSED>

C><SUPPLYMAGNETVALVE><OPEN> = = <MESSAGE72:"AIR BRAKE FAILURE - USW LOCOMOTIVE IN TRAIL ONLY">!!!WARNING NO 20 SUPPLY <SPACE><ENTER>

ERRORCODEdiagnosticcode72/NO20SUPPLY.BAT

SKIP

C><ANALOGCONVERTER20RESERVIOR> <MORE THAN 1 PSI PER LOOP>

C><MAINRESERVIOR>IS LESS THAN 78 PSI>

C><ADZBOARD><FAILED>

C><20TRANSDUCER><FAILED>

C><20PIPE><NO CURRENT>

C> IF <LEAD/TRAIL> <LEADIN> = = <BRAKECYLINDEREQUALIZINGPIPE><CUTOFF>

C><ANALOGCONVERTER20RESERVIOR><DISALBLED>

THEN

C><AUTOMATICBRAKEVALVEHANDLE><PENALTYAPPLICATION> = = <CUTOUTRELAY><DROPOUT>

C><BRAKEPIPE><EXHAUST> = = ><AUTOMATICBRAKEVALVEHANDLE><SERVICE APPLICATION>

C>><AUTOMATICBRAKEVALVEHANDLE><SERVICE APPLICATION> = = <EQUALIZINGRESERVIORMAGNETVALVE><DE-ENERGIZED>

C>= <EQUALIZINGRESERVIORMAGNETVALVE><DE-ENERGIZED> = = <BRAKEEQUALIZINGCIRCUIT><BACKUP>

C><BRAKECYLINDER> = = <BRAKEPIPEEQUALIZINGPIPE>

C>IF <LEAD/TRAIL><LEADOUT> = = <BRAKEPIPEEQUALIZINGPIPE><CUTOFF>

C><ANALOGCONVERTER20RESERVIOR><DISABLED>

NO20SUPPLY.BAT

C>ERRORCODEdiagnosticcode72/NO20SUPPLY.BAT

C:/AUTOERRORCODE.EXE COPY

C:/C>ERRORCODEdiagnosticcode72/NO20SUPPLY.BAT FAULTCODE1.COM

FAULTCODE1 = NO20SUPPLY

C:/AUTOERRORCODE.EXE COPY

C:/C>ERRORCODEdiagnosticcode72/NO20SUPPLY.BAT FAULTBIN.BAT /V

THE TIME IS <SPACE>t_THE DATE IS <SPACE>d

C:\TROUBLESHOOT.EXE**Diagnostic Code 72(No 20 Supply):** .TXT<OPEN TEXT VIEWER Y/N>

C><FAULTCODE72><CLEAR> = = <AIRBRAKESELFTEST.EXE><PASS>

Diagnostic Code 73(No 20 Exhaust)

20RESERVIOR.SYS

ANALOGCONVERTER20RESERVIOR.SYS

EXHAUSTMAGNETVALVE.SYS

MAINRESERVIOR.SYS

ADZVBOARD.SYS

20TRANSDUCER.SYS

LEADTRAILSWITCH.SYS

BRAKECYLINDEREQUALIZINGPIPE.SYS

AUTOMATICBRAKEVALVEHANDLE.SYS

CUTOUTRELAY.SYS

EQUALIZINGRESERVIORMAGNETVALVE.SYS

NO20EXHAUST.BAT

C><20RESERVIOR> <8PSI ABOVE PRESSURE FOR 8 SECONDS>

C><ANALOGCONVERTER20RESERVIOR> = = <EXHAUSTMAGNETVALVE><CLOSED>

C><EXHAUSTMAGNETVALVE><CLOSED> = = <MESSAGE73:"AIR BRAKE FAILURE - USW LOCOMOTIVE IN TRAIL ONLY">!!!WARNING NO 20 EXHUAST <SPACE><ENTER>

ERRORCODEdiagnosticcode72/NO20EXHAUST.BAT

SKIP

C><ANALOGCONVERTER20RESERVIOR> <MORE THAN 1 PSI PER LOOP>

C><MAINRESERVIOR>IS LESS THAN 78 PSI>

C><ADZBOARD><FAILED>

C><20TRANSDUCER><FAILED>

C><20PIPE><NO CURRENT>

C> IF <LEAD/TRAIL> <LEADIN> = = <BRAKECYLINDEREQUALIZINGPIPE><CUTOFF>

C><ANALOGCONVERTER20RESERVIOR><DISALBLED>

THEN

C><AUTOMATICBRAKEVALVEHANDLE><PENALTYAPPLICATION> = = <CUTOUTRELAY><DROPOUT>

C><BRAKEPIPE><EXHAUST> = = ><AUTOMATICBRAKEVALVEHANDLE><SERVICE APPLICATION>

C>><AUTOMATICBRAKEVALVEHANDLE><SERVICE APPLICATION> = = <EQUALIZINGRESERVIORMAGNETVALVE><DE-ENERGIZED>

C>= <EQUALIZINGRESERVIORMAGNETVALVE><DE-ENERGIZED> = = <BRAKEEQUALIZINGCIRCUIT><BACKUP>

C><BRAKECYLINDER> = = <BRAKEPIPEEQUALIZINGPIPE>

C>IF <LEAD/TRAIL><LEADOUT> = = <BRAKEPIPEEQUALIZINGPIPE><CUTOFF>

C><ANALOGCONVERTER20RESERVIOR><DISABLED>

NO20EXHAUST.BAT

C>ERRORCODEdiagnosticcode72/NO20EXHAUST.BAT

C:/AUTOERRORCODE.EXE COPY

C>ERRORCODEdiagnosticcode72/NO20EXHAUST.BAT FAULTCODE1.COM

FAULTCODE1 = NO20 EXHAUST

C:/AUTOERRORCODE.EXE COPY

C>ERRORCODEdiagnosticcode72/NO20EXHAUST.BAT FAULTBIN.BAT /V

THE TIME IS <SPACE>t_THE DATE IS <SPACE>d

C:\TROUBLESHOOT.EXE**Diagnostic Code 73(No 20 Exhaust):**.TXT<OPEN TEXT VIEWER Y/N>

C><FAULTCODE73><CLEAR> = = <AIRBRAKESELFTEST.EXE><PASS>

Diagnostic Code 74(MVLT Stuck CLOSED):

CCB.EXE.SYS

BRAKECYLINDEREQUALIZINGPIPECUTOFFMAGNETVALVE.SYS

BRAKECYLINDEREQUALIZINGPIPE.SYS

LEAD-TRAILMAGNETVALVE.SYS

ANALOGCONVERTER20RESERVIOR.SYS

LEAD-TRAILMAGNETVALVE.BAT

ERRORCODEdiagnosticcode74/LEAD-TRAILMAGNETVALVE.BAT

NOTE ONLY LOGS DURING A AIRBRAKESELFTEST.EXE

AIRBRAKESELFTEST.EXE

CHECK

C:<FAULTCODE74>

IF

C:NO20SUPPLY.EXE(FAULT)

C:NO20EXHAUST.EXE(FAULT)

C><BRAKECYLINDEREQUALIZINGPIPECUTOFFMAGNETVALVE><DE-ENERGIZED> = = <BRAKECYLINDEREQUALIZINGPIPE><EXHAUST>

C><BRAKECYLINDEREQUALIZINGPIPE><EXHAUST> = = <ANALOGCONVERTER20RESERVIOR> /W 10SECONDS

THEN

C><BRAKECYLINDEREQUALIZINGPIPE><CHARGES 55PSI> /W 10 SECONDS

THEN

C><MESSAGE74:EM2000"AIR BRAKE FAILURE - USE LOCOMOTIVE IN TRAIL ONLY">!!!WARNING LEAD - TRAIL MAGNET VALVE STUCK CLOSED!!! <SPACE><ENTER>

C> IF <LEAD/TRAIL> <LEADIN> = = <BRAKECYLINDEREQUALIZINGPIPE><CUTOFF>

C><ANALOGCONVERTER20RESERVIOR><DISALBLED>

THEN

C><AUTOMATICBRAKEVALVEHANDLE><PENALTYAPPLICATION> = =
<CUTOUTRELAY><DROPOUT>

C><BRAKEPIPE><EXHAUST> = = ><AUTOMATICBRAKEVALVEHANDLE><SERVICE
APPLICATION>

C>><AUTOMATICBRAKEVALVEHANDLE><SERVICE APPLICATION> = =
<EQUALIZINGRESERVIORMAGNETVALVE><DE-ENERGIZED>

C>= <EQUALIZINGRESERVIORMAGNETVALVE><DE-ENERGIZED> = =
<BRAKEEQUALIZINGCIRCUIT><BACKUP>

C><BRAKECYLINDER> = = <BRAKEPIPEEQUALIZINGPIPE>

C>IF <LEAD/TRAIL><LEADOUT> = = <BRAKEPIPEEQUALIZINGPIPE><CUTOFF>

C><ANALOGCONVERTER20RESERVIOR><DISABLED>

LEAD-TRAILMAGNETVALVE.BAT

C>ERRORCODEdiagnosticcode74/LEAD-TRAILMAGNETVALVE.BAT

C:/AUTOERRORCODE.EXE COPY

C>ERRORCODEdiagnosticcode74/LEAD-TRAILMAGNETVALVE.BAT

FAULTCODE1=.COM

FAULTCODE1 = TRAILMAGNETVALVE STUCK CLOSED

C:/AUTOERRORCODE.EXE COPY

C>ERRORCODEdiagnosticcode74/LEAD-TRAILMAGNETVALVE.BAT

FAULTBIN.BAT /V

THE TIME IS <SPACE>t_THE DATE IS <SPACE>d

C><FAULTCODE74><CLEAR> = = <AIRBRAKESELFTEST.EXE><PASS>

Diagnostic Code 75(MV20 Stuck On):

CCB.EXE.SYS

BRAKECYLINDEREQUALIZINGPIPECUTOFFMAGNETVALVE.SYS

BRAKECYLINDEREQUALIZINGPIPE.SYS

LEAD-TRAILMAGNETVALVE.SYS

ANALOGCONVERTER20RESERVIOR.SYS

20RESERVIOR.SYS

20TRANSDUCER.SYS

INDEPENDENTAPPLICATION.SYS

LEADTRAILSWITCH.SYS

ERRORCODEdiagnosticcode75/MV20STUCKOPEN.BAT

NOTE ONLY LOGS DURING A AIRBRAKESELFTEST.EXE

AIRBRAKESELFTEST.EXE

CHECK

C><ANALOGCONVERTER20><NORMAL>= = <BRAKEPIPEEQUALIZINGPIPE><CHARGING><55PSI>

THEN

C><BRAKEPIPEEQUALIZINGPIPE><CUTSOFF> /W FIVE SECONDS

THEN

C><20TRANSDUCER>< LESS THAN 50 PSI> = = <MESSAGE75:EM2000"AIR BRAKE CUT-OFF FAILURE - USE LOCOMOTIVE IN LEAD MODE ONLY">!!!WARNING MV20 STUCK OPEN!!!<SPACE><ENTER>

C><BRAKECYLINDEREQUALIZINGPIPECUTOFFMAGNETVALVE><FAILS TO ENERGIZE>

MV20STUCKOPEN.BAT

C>ERRORCODEdiagnosticcode75/MV20STUCKOPEN.BAT

C:/AUTOERRORCODE.EXE COPY

C>ERRORCODEdiagnosticcode75/MV20STUCKOPEN.BAT

FAULTCODE1.COM

FAULTCODE1 = SHORT CIRCUIT IN MV20 CONNECTOR

FAULTCODE2.COM

FAULTCODE2 = EXCESSIVE LEAKAGE IN BRAKE CYLINDER EQUALIZING PIPE

C:/AUTOERRORCODE.EXE COPY

C>ERRORCODEdiagnosticcode75/MV20STUCKOPEN.BAT

FAULTBIN.BAT /V

THE TIME IS <SPACE>t_THE DATE IS <SPACE>d

C:\TROUBLESHOOT.EXE**Diagnostic Code 75(MV20 Stuck On):**.TXT<OPEN TEXT VIEWER Y/N>

C><FAULTCODE75><CLEAR> = = <AIRBRAKESELFTEST.EXE><PASS>

Diagnostic Code 80(Defective 16 Transducer):

16TRANSDUCER.SYS

ANALOGCONVERTER16PIPE(CONTROL PIPE).SYS

16PIPEDEFAULTMAGNETVALVE.SYS

BRAKECYLINDER.SYS

BRAKECYLINDERRELAY.SYS

BRAKECYLINDEREQUALIZINGPIPE

DEFECTIVE16TRANSDUCER.BAT

C><16TRANSDUCER> GREATERTHAN OR LESS THAN VALID RANGE>

C><ANALOGCONVERTER16PIPE><DISALBED> = = <16PIPEDEFAULTMAGNETVALVE>

THEN

C><BRAKECYLINDEREQUALIZINGPIPE<PRESSURE> = =<BUSED TO BRAKECYLINDERRELAY>

C><MESSAGE80:EM2000"AIR BRAKE FAILURE - BACK-UP BRAKING ACTIVE">!!! WARNING DEFECTIVE 16 TRANSDUCER!!!<SPACE><ENTER>

DEFECTIVE16TRANSDUCER.BAT

ERRORCODEdiagnsoticcode80/DEFECTIVE16TRANSDUCER.BAT

C:/AUTOERRORCODE.EXE COPY

C:/ERRORCODEdiagnsoticcode80/DEFECTIVE16TRANSDUCER.BAT

FAULTCODE1.COM

FAULTCODE1 = DISCONNECTED 16 TRANSDUCER

FAULTCODE2.COM

FAULTCODE2 =SHORTED(CLOSED CIRCUIT) TRANSDUCER/CONNECTOR

C:/AUTOERRORCODE.EXE COPY

C:/ERRORCODEdiagnsoticcode80/DEFECTIVE16TRANSDUCER.BAT

FAULTBIN.BAT /V

THE TIME IS <SPACE>t_THE DATE IS <SPACE>d

C:\TROUBLESHOOT.EXE**Diagnostic Code 80(Defective 16 Transducer):**

.TXT<OPEN TEXT VIEWER Y/N>

C><FAULTCODE80><CLEAR> = = <16TRANSDUCER><VALID LIMITS>

C><BRAKECYLINDERS><EXHAUSTED> = = <ELECTRONICBRAKE>

C>RESET Y/N

Diagnostic Code 81(16 Supply Magnet Valve Stuck Closed):

16RESERVIOR.SYS

ANALOGCONVERTER16PIPE(CONTROL PIPE).SYS

16SUPPLYMAGNETVALVE.SYS

MAINRESERVIOR.SYS

ADZBOARD.SYS

16PORTTRANSDUCER.SYS

16PIPEDEFAULTMAGNETVALVE.SYS

BRAKECYLINDEREQUALIZINGPIPE.SYS

BRAKECYLINDERRELAY.SYS

16SUPPLYMAGNETVALVESTUCKCLOSED.BAT

**C><16RESERVIOR><REDUCTION 8 PSI BELOW CURRENT PSI> = =
<DURATION><8SECONDS>**

**C><MESSAGE81:EM2000"AIR BRAKE FAILURE - BACK-UP BRAKING ACTIVE">!!!
WARNING 16 SUPPLY MAGNET VALVE STUCK CLOSED!!!<SPACE><ENTER>**

**C><ANALOGCONVERTER16PIPE><DISABLE> = =
<16PIPEDEFAULTMAGNETVALVE><DE-ENERGIZED>**

THEN

C><BRAKECYLINDEREQUALIZINGPIPE><BUSED> = = <BRAKECYLINDERRELAY>

**C>
SKIP<ERRORCODEdiagnosticcode81/16EXHAUSTMAGNETVALVESTUCKCLOSED.BAT**

C> IF <16 RESERVIOR.SYS><VALUE MORE THAN 1PSI PER LOOP>

C><MAINRESERVIOR.SYS><LESS THAN 78PSI>

C><ADZBOARD><FAILED>

C><16TRANSDUCER><FAULT>

C><ANALOGCONVERTER16PIPE><DE-ENERGIZED>

16SUPPLYMAGNETVALVESTUCKCLOSED.BAT

ERRORCODEdiagnosticcode81/16SUPPLYMAGNETVALVESTUCKCLOSED.BAT

C:/AUTOERRORCODE.EXE COPY

C:/ERRORCODEdiagnosticcode81/16SUPPLYMAGNETVALVESTUCKCLOSED.BAT FAULTCODE1.COM

FAULTCODE1 = 16 SUPPLY MAGNET VALVE STUCK CLOSED

C:/AUTOERRORCODE.EXE COPY

C:/ERRORCODEdiagnosticcode81/16SUPPLYMAGNETVALVESTUCKCLOSED.BAT FAULTBIN.BAT /V

THE TIME IS <SPACE>t_THE DATE IS <SPACE>d

C:\TROUBLESHOOT.EXE**Diagnostic Code 81(16 Supply Magnet Valve Stuck Closed):**
.TXT<OPEN TEXT VIEWER Y/N>

C><FAULTCODE81><CLEAR> = = <AUTOSELFTEST.EXE><PASS>

C><BRAKECYLINDER><ALL EXHAUSTED>

Diagnostic Code 82(16 Exhaust Magnet Valve Stuck Closed):

16TRANSDUCER.SYS

ANALOGCONVERTER16PIPE(CONTROL PIPE).SYS

16PIPEDEFAULTMAGNETVALVE.SYS

BRAKECYLINDER.SYS

BRAKECYLINDERRELAY.SYS

BRAKECYLINDEREQUALIZINGPIPE

ADZBOARD.SYS

MAINRESERVIOR

EXHAUSTMAGNETVALVESTUCKCLOSED.BAT

C><16RESERVIOR><8 PSI ABOVE CURRENT PSI> = = <DURATION><8SECONDS>

C><MESSAGE82:EM2000"AIR BRAKE FAILURE - BACK-UP BRAKING ACTIVE">!!! WARNING 16 EXHAUST MAGNET VALVE STUCK CLOSED!!!<SPACE><ENTER>

THEN

C><ANALOGCONVERTER16PIPE><DISABLE> = = <16PIPEDEFAULTMAGNETVALVE><DE-ENERGIZED>

THEN

C><BRAKECYLINDEREQUALIZINGPIPE><BUSED> = = <BRAKECYLINDERRELAY>

C> SKIP<ERRORCODEdiagnosticcode82/16EXHAUSTMAGNETVALVESTUCKCLOSED.BAT

C> IF <16 RESERVIOR.SYS><VALUE MORE THAN 1PSI PER LOOP>

C><MAINRESERVIOR.SYS><LESS THAN 78PSI>

C><ADZBOARD><FAILED>

C><16TRANSDUCER><FAULT>

C><ANALOGCONVERTER16PIPE><DE-ENERGIZED>

EXHAUSTMAGNETVALVESTUCKCLOSED.BAT

ERRORCODEdiagnosticcode82/16EXHAUSTMAGNETVALVESTUCKCLOSED.BAT

C:/AUTOERRORCODE.EXE COPY

C:/ERRORCODEdiagnosticcode82/16EXHAUSTMAGNETVALVESTUCKCLOSED.BAT FAULTCODE1.COM

FAULTCODE1= 16 EXHAUSTMAGNETVALVESTUCKCLOSED

C:/ERRORCODEdiagnosticcode82/16EXHAUSTMAGNETVALVESTUCKCLOSED.BAT FAULTBIN.BAT /V

THE TIME IS <SPACE>t_THE DATE IS <SPACE>d

C:\TROUBLESHOOT.EXE**Diagnostic Code 82(16 Exhaust Magnet Valve Stuck Closed):**
.TXT<OPEN TEXT VIEWER Y/N>

C><FAULTCODE83><CLEAR> = = <AUTOSELFTEST.EXE><PASS>

C><BRAKECYLINDER><ALL EXHAUSTED>

Diagnostic Code 83(No Electronic BC Control):

CCB.EXE

AIRBRAKESELFTEST

NOTELECTRONICBCCONTROL.BAT

ERRORCODEdiagnonsticcode83/NOTELECTRONICBCCONTROL.BAT<LOGGED ONLY AIRBRAKESELFTTEST.EXE

AIRBRAKESELFTEST.EXE

CHECKS

C><BRAKECYLINDER/16RESERVIOR><CHARGES TO 72 PSI> /W 5SECONDS = = <CHECKS NORMAL>

C><BRAKECYLINDER><+/-4PSI> = =<16TRANSDUCER><READING>

C><CHECKSNORMAL>

C> IF <BRAKECYLINDER><GREATERTHAN 4PSI AND LESSTHAN 4PSI = 16RESERVIOR> = = <AIRBRAKESELFTEST.EXE><FAIL>

THEN

C><AIRBRAKESELFTEST.EXE><FAIL> = = <MESSAGECODE83: EM 2000"AIR BRAKE FAILURE- BACK-UP BRAKING ACTIVE">!!!WARNING NO ELECTRONIC BRAKE CYLINDER CONTROL!!!<SPACE><ENTER>

C><ANALOGCONVERTER16PIPE><DISABLE>

C><16PIPEDEFAULTMAGNETVALVE><DE-ENERGIZE>

C><BRAKECYLINDEREQUALIZINGPIPE><PRESSURE BUSED> = = <BRAKECYLINDERRELAY>

C:AIRBRAKESELFTEST.EXE/

THEN

CHECKS

C><16RESERVIOR><REDUCTION 30PSI> /W 5SECONDS

CHECKS

C><BRAKECYLINDER><+/-4PSI> = =<16TRANSDUCER><READING>

C><CHECKSNORMAL>

C> IF <BRAKECYLINDER><GREATERTHAN 4PSI AND LESSTHAN 4PSI = 16RESERVIOR> = = <AIRBRAKESELFTEST.EXE><FAIL>

THEN

C><AIRBRAKESELFTEST.EXE><FAIL> = = <MESSAGECODE83: EM 2000"AIR BRAKE FAILURE- BACK-UP BRAKING ACTIVE">!!!WARNING NO ELECTRONIC BRAKE CYLINDER CONTROL!!!<SPACE><ENTER>

C><ANALOGCONVERTER16PIPE><DISABLE>

C><16PIPEDEFAULTMAGNETVALVE><DE-ENERGIZE>

C><BRAKECYLINDEREQUALIZINGPIPE><PRESSURE BUSED> = = <BRAKECYLINDERRELAY>

NOTELECTRONICBCCONTROL.BAT

C>ERRORCODEdiagnonsticcode83/NOTELECTRONICBCCONTROL.BAT

C:/AUTOERRORCODE.EXE COPY

C>ERRORCODEdiagnonsticcode83/NOTELECTRONICBCCONTROL.BAT

FAULTCODE1.COM

FAULTCODE1=DISCONNECTED WIRING OF Pipe Default Magnet Valve (MV16T) wiring.

C:/AUTOERRORCODE.EXE COPY

C>ERRORCODEdiagnonsticcode83/NOTELECTRONICBCCONTROL.BAT

FAULTBIN.BAT /V

THE TIME IS <SPACE>t_THE DATE IS <SPACE>d

C:\TROUBLESHOOT.EXE**Diagnostic Code 83(No Electronic BC Control):** .TXT<OPEN TEXT VIEWER Y/N>

C><FAULTCODE><CLEARS> = = <AIRBRAKESELFTEST.EXE><PASS>

C>ALL<BRAKECYLINDERS><EXHAUSTED>

Diagnostic Code 89(Defective BC Transducer):

BRAKECYLINDERTRANSDUCER.SYS

EQUALIZINGRESERVIORDEFUALTMAGENTVALVE.SYS

16PIPEDEFAULTMAGNETVALVE.SYS

BRAKECYLINDER.SYS

DEFECTIVEBCTRANSDUCER.BAT

C><BRAKECYLINDERTRANSDUCER><VALUE OUT OF RANGE> = = <EQUALIZINGRESERVIORDEFUALTMAGENTVALVE>CYCLE DISABLED>

C><16PIPEDEFAULTMAGNETVALVE> = = <BRAKECYLINDER><0PSI>

THEN

C><MESSAGE89>!!!WARNING DEFECTIVE BRAKE CYLINDER TRANSDUCER!!! <SPACE><ENTER>

DEFECTIVEBCTRANSDUCER.BAT

ERRORCODEdiagnosticcode89/DEFECTIVEBCTRANSDUCER.BAT

C:/AUTOERRORCODE.EXE COPY

ERRORCODEdiagnosticcode89/DEFECTIVEBCTRANSDUCER.BAT

FAULTCODE1.COM

FAULTCODE1 = DISCONNECT TRANSDUCER

FAULTCODE2.COM

FAULTCODE2 = SHORTED<CLOSED>TRANSDUCER/CONNECTOR

C:/AUTOERRORCODE.EXE COPY

C:/ERRORCODEdiagnosticcode89/DEFECTIVEBCTRANSDUCER.BAT

FAULTBIN.BAT /V

THE TIME IS <SPACE>t_THE DATE IS <SPACE>d

C:\TROUBLESHOOT.EXE**Diagnostic Code 89(Defective BC Transducer):**

.TXT<OPEN TEXT VIEWER Y/N>

C><FAULTCODE89><CLEAR> = = <BRAKECYLINDERTRANSDUCER><WITHIN VALID LIMITS>

Diagnostic Code 90(Defective ADZ Board):

ADZBOARD.SYS

CUTOFFRELAY.SYS

TRANSDUCERS.SYS

PNEUMATICCONTROLUNIT.SYS

INDEPENDENTMAGNETVAVLE.SYS

EQUALIZINGRESERVIORDEFAULTMAGNETVALVE.SYS

16PIPEDEFUALTMAGNETVLAVE.SYS

BRAKEPIPE

DEFECTIVEADZBORD.BAT

C><ADZBOARD>+/- 0.1VOLT FROM 2.5 VOLTS> = = <MESSAGE90:EM2000"AIR BRAKE FAILURE - USE LOCOMOTIVE IN TRAIL AND OPEN AB CIRCUIT BREAKER">!!! WARNING DEFECTIVE ADZ BOARD!!!<SPACE><ENTER>

DEFECTIVEADZBORD.BAT

ERRORCODEdiagnosticcode90/DEFECTIVEADZBORD.BAT

C:/AUTOERRORCODE.EXE COPY

C:/ERRORCODEdiagnosticcode90/DEFECTIVEADZBORD.BAT FAULTCODE1.COM

C:/AUTOERRORCODE.EXE COPY

C:/ERRORCODEdiagnosticcode90/DEFECTIVEADZBORD.BAT FAULTBIN.BAT /V

THE TIME IS <SPACE>t_THE DATE IS <SPACE>d

C:\TROUBLESHOOT.EXE**Diagnostic Code 90(Defective ADZ Board):** .TXT<OPEN TEXT VIEWER Y/N>

C><FAULTCODE90><CLEAR> = = <ADZBOARD><RESTORED 2.5 VOLT RANGE>

Diagnostic Code Z10(No C3 Controller):

C:\CCB.EXE

CCB.CONFIG.SYS<ON>

AIRBRAKESELFTEST.EXE<CHECKDRIVER>

CONTROLLER3.SYS<ON/OFF> ON

C> <C3INDEPENDENTHANDLE><FREQUENCY GREATER THAN 100HZ> = = <AUTOMATICHANDLE><FREQUENCY GREATER THAN 100HZ>

CONTROLLER1.SYS<FUNCTIONING>

C> IF <C3INDEPENDENTHANDLE><FREQUENCY LESS THAN 100HZ> = = <AUTOMATICHANDLE><FREQUENCY LESS THAN 100HZ>

THEN

c> CONTOLLER3.SYS<MALFUNCTION>WARNING!!! CONTROLLER NUMBER FLAGGED MISSING!!! <SPACE><ENTER>

ERRORCODEdiagnosticcodeZ10\NOCONTROLLER1.BAT

C:\ERRORCODEdiagnosticcodeZ10\NOCONTROLLER1.BAT

c:\ERRORCODEdiagnosticcodeZ10\NOC3ONTROLLER3.SYS IF <INDEPENDENT HANDLE><FREQUENCY LESS THAN 100HZ> = = <AUTOMATIC HANDLE><FREQUENCY LESS THAN 100HZ>!!!WARNING NO CONTROLLER NUMBER 3! <SPACE><ENTER>

C:AUTOERRORCODE.EXE COPY

ERRORCODEdiagnosticcodeZ1O/NOCONTROLLER3.BAT FAULTCODE20.COM

C:AUTOERRORCODE.EXE COPY

ERRORCODEdiagnosticcodeZ10\NOCONTROLLER3.BAT FAULTBIN.BAT /V

THE TIME IS <SPACE>T_THE DATE IS <SPACE>D

C:\TROUBLESHOOT.EXE\Diagnostic Code Z10_No C3 Controller.TXT<OPEN TEXT VIEWER Y/N>

C>CCB.EXE\CONTROLLER3.SYS

C> CONTROLLER3.SYS<RESET> CHECK DRIVER AIRBRAKESELFTEST.EXE

C:\TROUBLESHOOT.EXE\Diagnostic Code Z100_No C3 Controller.TXT

C> <FUALTCODEZ10><CLEAR> = = <AIRBRAKESELFTEST><PASS>

CCB.SYS.CONFIG<DEFAULT

CONTROLLERNO3.SYS<DEFAULT>

THEN

LEADTRAILSWITCH3=c:\LEAD/TRAILSWITCH3\LEAD/TRAILSWITCH3.SYS<TRAIL>

AUTOMATICEMERGENCYSWITCH3=C:\AUTOMATICEMERGENCYSWITCH3.SYS<CLOSED>

C><LEAD/TRAILSWITCH3.SYS<DEEFAULT> AIR BRAKE FAILURE- USE LOCOMOTIVE IN TRAIL ONLY<SPACE><ENTER>

C> CCB.SYS<CONTROLLERNNO1> <SELECTED> AIR BRAKE CONTROLLER NUMBER 1 FAILURE - SWITCH TO AIR BRAKE CONTROLLER NUMBER 1<SPACE><ENTER>

OR

C>CCB.SYS<CONTROLLERNNO2> <SELECTED> AIR BRAKE CONTROLLER NUMBER 1 FAILURE - SWITCH TO AIR BRAKE CONTROLLER NUMBER 2<SPACE><ENTER>

C>CCB.SYS<CONTROLLERNO1><INOPERATIVE> = = <CONTROLLERNO2><INOPERATIVE>

THEN

C><LEAD/TRAILSWITCH3.SYS<DEEFAULT> AIR BRAKE FAILURE- USE LOCOMOTIVE IN TRAIL ONLY<SPACE><ENTER>

CONTROLLER2.SYS.<ON/OFF>

CONTROLLER3.SYS<ON/OFF>

NO C3 CONTROLLER DEFAULT CODE Z10

C>CCB.SYS<ON>= = <CONTROLLER3.SYS>

Diagnostic Code Z11(C3 Automatic Handle Frequency Low):

C:\CCB.EXE

CCB.CONFIG.SYS<ON>

AIRBRAKESELFTEST.EXE<CHECKDRIVER>

CONTROLLER3.SYS<ON/OFF> ON

C>CUTOUTRELAYS.SYS

C3AUTOMATICHANDLEFREQUENCYLOW.BAT

C> IF CONTROLLER3<AUTOMATICHANDLE.SYS><FREQUENCY LESS THAN 808HZ>!!!WARNING!!! CONTROLLER NUMBER 3 AUTOMATIC HANDLE FREQUENCY LOW!!!<SPACE><ENTER>

THEN

C> CONTROLLER3<AUTOMATICHANDLE.SYS><FREQUENCY LESS THAN 808HZ> = = <CUTOUTRELAY.SYS><PENALTYAPPLICATION>

C>CONTROLLER3<AUTOMATICHANDLE.SYS><FREQUENCY LESS THAN 808HZ> = = <BRAKEPIPE.SYS><EXHUAST SERVICE APPLICATION RATE>

ERRORCODEdiagnosticcodeZ11\C1AUTOMATICHANDLEFREQUENCYLOW.BAT

C:AUTOERRORCODE.EXE COPY

C:ERRORCODEdiagnosticcodeZ11\C1AUTOMATICHANDLEFREQUENCYLOW.BAT FAULTCODE1.COM

C:ERRORCODEdiagnosticcodeZ11\C1AUTOMATICHANDLEFREQUENCYLOW.BAT FAULTCODE1.COM

FAULTCODE 1 = FAULTY CONTROLLER

C:ERRORCODEdiagnosticcodeZ11\C1AUTOMATICHANDLEFREQUENCYLOW.BAT FAULTCODE2.COM

FAULTCODE 2 = FAULTY WIRING

C:AUTOERRORCODE.EXE COPY

C:ERRORCODEdiagnosticcodeZ11\C1AUTOMATICHANDLEFREQUENCYLOW.BAT FAULTBIN.BAT /V

THE TIME IS <SPACE>t_THE DATE IS <SPACE>d

C:\TROUBLESHOOT.EXE\Diagnostic Code Z11_No C3 Controller.TXT<OPEN TEXT VIEWER Y/N>

C>FAULTCODE1.COM<CONTROLLER3.SYS\AUTOMATICHANDLE><INCORRECTPOSITION

C>FAULTCODE2.CON<DEENERGIZED>!!!WARNING!!! DISCONNECTED OR DAMAGED FIBER OBTIC CABLE!!! <SPACE><ENTER>

C>CCB.SYS<CONTROLLERNO1><SELECTED>AIR BRAKE CONTROLLER NUMBER 3 FAILURE - SWTICH TO CONTROLLER NUMBER1<SPACE><ENTER> Y/N

OR

C>CCB.SYS<CONTROLLERNO2><SELECTED>AIR BRAKE CONTROLLER NUMBER 3 FAILURE - SWTICH TO CONTROLLER NUMBER 2<SPACE><ENTER> Y/N

C>CCB.EXE\CONTROLLER3.SYS

C> CONTROLLER1.SYS<RESET> CHECK DRIVER AIRBRAKESELFTEST.EXE

C:\TROUBLESHOOT.EXE\Diagnostic Code Z11_No C3 Controller.TXT<OPEN TEXT VIEWER Y/N>

C> <FUALTCODEZ11><CLEAR> = = <AIRBRAKESELFTEST><PASS>

Diagnostic Code Z12(C3 Automatic Handle Frequency High):

C:\CCB.EXE

CCB.CONFIG.SYS<ON>

AIRBRAKESELFTEST.EXE<CHECKDRIVER>

CONTROLLER3.SYS<ON/OFF> ON

C>CUTOUTRELAYS.SYS

C3AUTOMATICHANDLEFREQUENCYHIGH.BAT

C> IF CONTROLLER3<AUTOMATICHANDLE.SYS><FREQUENCY GREATER THAN 11392HZ>!!!WARNING!!! CONTROLLER NUMBER 3 AUTOMATIC HANDLE FREQUENCY HIGH!!!<SPACE><ENTER>

THEN

C> CONTROLLER3<AUTOMATICHANDLE.SYS><FREQUENCY GREATER THAN 11392HZ> = = <CUTOUTRELAY.SYS><PENALTYAPPLICATION>

C>CONTROLLER3<AUTOMATICHANDLE.SYS><FREQUENCY GREATER THAN 11392HZ> = = <BRAKEPIPE.SYS><EXHUAST SERVICE APPLICATION RATE>

C:ERRORCODEdiagnosticcodeZ12\C3AUTOMATICHANDLEFREQUENCYHIGH.BAT FAULTCODE1.COM

C:ERRORCODEdiagnosticcodeZ12\C3AUTOMATICHANDLEFREQUENCYHIGH.BAT FAULTBIN.BAT /V

THE TIME IS <SPACE>t_THE DATE IS <SPACE>d

C:\TROUBLESHOOT.EXE\Diagnostic Code Z12_No C3 Controller.TXT<OPEN TEXT VIEWER Y/N>

C>CCB.SYS<CONTROLLERNO1><SELECTED>AIR BRAKE CONTROLLER NUMBER 3 FAILURE - SWTICH TO CONTROLLER NUMBER1<SPACE><ENTER>

OR

C>CCB.SYS<CONTROLLERNO2><SELECTED>AIR BRAKE CONTROLLER NUMBER 3 FAILURE - SWTICH TO CONTROLLER NUMBER 2<SPACE><ENTER>

C> C3AUTOMATICHANDLEFREQUENCYHIGH.BAT<RETURNING TO CONTROLLER NUMBER 3> = = <RESULT PENALTY BRAKE APPLICATION>

C>CCB.EXE\CONTROLLER1.SYS

C> CONTROLLER\3.SYS<RESET> CHECK DRIVER AIRBRAKESELFTEST.EXE

C:\TROUBLESHOOT.EXE\Diagnostic Code Z12_No C3 Controller.TXT <OPEN TEXT VIEWER Y/N>

C> <FUALTCODEZ12><CLEAR> = = <AIRBRAKESELFTEST><PASS>

Diagnostic Code Z13(C3 Automatic Release Switch Stuck Open)

AUTOMATICRELEASESWITCH.SYS

C3AUTOMATICBRAKE=C:\C3AUTMATICBRAKE.SYS

C3AUTOMATICRELEASESWITCH3=C:\C3AUTOMATICRELEASESWITHC3.SYS<RELEASE>

DELAYCOUNTER=C:\DELAYCOUNTER.SYS

C3AUTOMATICRELEASESWITCHSTUCKOPEN.BAT

C>IF <C3AUTOMATICRELEASESWITCH ><OPEN> = = <C3AUTOMATICHANDLE><RELEASE>!!!WARNING AUTOMATIC RELEASE SWITCH STUCK OPEN!!!<SPACE><ENTER>

C><C3AUTOMATICRELEASESWITCH><OPEN> = = <DELEAYCOUNTER.SYS<GREATER THAN 2SECONDS> !!!WARNING AUTOMATIC RELEASE SWITCH STUCK OPEN!!! <SPACE><ENTER>

C><C3AUTOMATICBRAKE.SYS><GREATER THAN 11000HZ> = = <C3AUTOMATICRELEASESWITCH<OPEN>!!!WARNING AUTOMATIC RELEASE SWITCH STUCK OPEN!!!<SPACE><ENTER>

ERRORCODEdiagnosticcodeZ13\C3AUTOMATICRELEASESWITCHSTUCKOPEN.BAT

C:ERRORCODEdiagnosticcodeZ13\C3AUTOMATICRELEASESWITCHSTUCKOPEN.BAT

C:AUTOERRORCODE.EXE COPY

C:ERRORCODEdiagnosticcodeZ13\C3AUTOMATICRELEASESWITCHSTUCKOPEN.BAT FAULTCOD1.COM

C:AUTOERRORCODE.EXE COPY

C:ERRORCODEdiagnosticcodeZ13\C3AUTOMATICRELEASESWITCHSTUCKOPEN.BAT FAULTBIN.BAT /V

THE TIME IS <SPACE>t_THE DATE IS <SPACE>d

C>CCB.SYS<CONTROLLERNO1><SELECTED>AIR BRAKE CONTROLLER NUMBER 3FAILURE - SWTICH TO CONTROLLER NUMBER 1<SPACE><ENTER>

OR

C>CCB.SYS<CONTROLLERNO2><SELECTED>AIR BRAKE CONTROLLER NUMBER 3 FAILURE - SWTICH TO CONTROLLER NUMBER 2<SPACE><ENTER>

C:\TROUBLESHOOT.EXE\Diagnostic Code Z13_No 3 Controller.TXT<OPEN TEXT VIEWER Y/N>

C> <FUALTCODEZ13><CLEAR> = = <C2AUTOMATICHANDLE><RELEASE>

THEN

C> AUTOMATICRELEASESWITCH.SYS<CLOSED>

Diagnostic Code Z14(C3 Automatic Release Switch Stuck Closed):

AUTOMATICRELEASESWITCH.SYS

C3AUTOMATICBRAKE=C:\C3AUTMATICBRAKE.SYS

C3AUTOMATICRELEASESWITCH3=C:\C3AUTOMATICRELEASESWITHC3.SYS<RELEASE>

DELAYCOUNTER=C:\DELAYCOUNTER.SYS

C3AUTOMATICRELEASESWITCHSTUCKCLOSED.BAT

C>IF <C3AUTOMATICRELEASESWITCH ><OPEN> = = <C3AUTOMATICHANDLE><RELEASE>!!!WARNING AUTOMATIC RELEASE SWITCH STUCK OPEN!!!<SPACE><ENTER>

C> IF <C3AUTOMATICRELEASESWITCH><OPEN> = = <DELEAYCOUNTER.SYS<GREATER THAN 2SECONDS> !!!WARNING AUTOMATIC RELEASE SWITCH STUCK OPEN!!!<SPACE><ENTER>

C> IF<C3AUTOMATICBRAKE.SYS><GREATER THAN 11000HZ> = = <C2AUTOMATICRELEASESWITCH<OPEN>!!!WARNING AUTOMATIC RELEASE SWITCH STUCK OPEN!!!<SPACE><ENTER>

THEN

C>IF<C3AUTOMATICBRAKE.SYS><LESS THAN 10508HZ> = = <C3AUTOMATICRELEASESWITCH<CLOSED>!!!WARNING AUTOMATIC RELEASE SWITCH STUCK CLOSED!!!<SPACE><ENTER>

C><C3AUTOMATICBRAKERELEASWITCH>CLOSED>

C3AUTOMATICRELEASESWITCHSTUCKCLOSED.BAT

ERRORCODEdiagnosticcodeZ14\C3AUTOMATICRELEASESWITCHSTUCKCLOSED.BAT

C:ERRORCODEdiagnosticcodeZ14\C3AUTOMATICRELEASESWITCHSTUCKCLOSED.BAT

C:AUTOERRORCODE.EXE COPY

C:ERRORCODEdiagnosticcodeZ14\C3AUTOMATICRELEASESWITCHSTUCKCLOSED.BAT FAULTCOD1.COM

C:AUTOERRORCODE.EXE COPY

C:ERRORCODEdiagnosticcodeZ14\C3AUTOMATICRELEASESWITCHSTUCKCLOSED.BAT FAULTBIN.BAT /V

THE TIME IS <SPACE>t_THE DATE IS <SPACE>d

C>CCB.SYS<CONTROLLERNO1><SELECTED>AIR BRAKE CONTROLLER NUMBER 3 FAILURE - SWTICH TO CONTROLLER NUMBER 1<SPACE><ENTER>

OR

C>CCB.SYS<CONTROLLERNO2><SELECTED>AIR BRAKE CONTROLLER NUMBER 3 FAILURE - SWTICH TO CONTROLLER NUMBER 2<SPACE><ENTER>

C:\TROUBLESHOOT.EXE\Diagnostic Code Z14_No C2 Controller.TXT<OPEN TEXT VIEWER Y/N>

CLEAR FAULT

C> <FUALTCODEZ14><CLEAR> = = <C3AUTOMATICHANDLE><RELEASE>

THEN

C> AUTOMATICRELEASESWITCH.SYS<OPEN>

Diagnostic Code Z15(C3 Automatic Emergency Switch Stuck Open):

C:\CCB.EXE

CCB.CONFIG.SYS.ON

AUTOEMERGENCYSWITCH3.SYS

C3CONTROLLER.SYS.SYS

C3AUTOMATICHANDLE.SYS

DELAYCOUNTER.SYS

CUTOUTRELAY.SYS

BRAKEPIPES.YS

C3AUTOMATICEMERGENCYSWITCHSTUCKOPEN.BAT

C>IF CONTROLLER3<C3AUTOMATICHANDLE><FREQUENCY GREATER THAN 1692 HZ> = = <AUTOMATICEMERGENCYSWITCH2><OPEN>

C>IF CONTROLLER3<C3AUTOMATICHANDLE><FREQUENCY GREATER THAN 1692 HZ> = = <DELAY COUNTER><2SECONDS>

C>CONTROLLER3<C3AUTOMATICHANDLE><EMERGENCY BRAKE APPLICATION>= =<CUT OUT RELAY><OUT>

C>CONTROLLER3<C3AUTOMATICHANDLE><EMERGENCY BRAKE APPLICATION>= <BRAKEPIPE.SYS><REDUCED TO ZERO PSI>

THEN

C><AUTOMATICEMERGNCYSWTICH3><REMAINS OPEN>!!!WARNING AUTOMATIC EMERGENCY SWITCH STUCK OPEN!!!<SPACE><ENTER>

ERRORCODEdiagnosticcodeZ15

C3AUTOMATICEMERGENCYSWITCHSTUCKOPEN.BAT

C:\AUTOERRORCODE.EXE COPY

C:ERRORCODEdiagnostic codeZ15\C3AUTOMATICEMERGENCYSWITCHSTUCKOPEN.BAT FAULTCODE1.COM

C:\AUTOERRORCODE.EXE COPY

C:ERRORCODEdiagnostic codeZ15\C3AUTOMATICEMERGENCYSWITCHSTUCKOPEN.BAT FAULTBIN.BAT /V

THE TIME IS <SPACE>t_THE DATE IS <SPACE>d

C:\TROUBLESHOOT.EXE\Diagnostic Code Z15_No C3 Controller.TXT<OPEN TEXT VIEWER Y/N>

C>CCB.SYS<CONTROLLERNO1><SELECTED>AIR BRAKE CONTROLLER NUMBER 3 FAILURE - SWTICH TO CONTROLLER NUMBER 1<SPACE><ENTER> Y/N

OR

C>CCB.SYS<CONTROLLERNO2><SELECTED>AIR BRAKE CONTROLLER NUMBER 3 FAILURE - SWTICH TO CONTROLLER NUMBER 2<SPACE><ENTER> Y/N

C> FUALTCODEZ15<CLEAR> IF <CONTROLLERNUMBER3><ACTIVE> = = <AUTOEMERGENCYSWITCH3<CLOSED>

C>RESET <EMERGENCY BRAKE APPLICATION>

C><AUTOMATICEMERGENCYSWTICH3.SYS><CLOSED>

C>IF <C3AUTOMATICHANDLE><NOT IN EMERGENCY POSITION>

Diagnostic Code Z16(C3 Automatic Emergency Switch Stuck Closed):

C:\CCB.EXE

CCB.CONFIG.SYS.ON

AUTOEMERGENCYSWITCH3.SYS

C3CONTROLLER.SYS.SYS

C3AUTOMATICHANDLE.SYS

DELAYCOUNTER.SYS

CUTOUTRELAY.SYS

BRAKEPIPES.SYS

C3AUTOMATICEMERGENCYSWITCHSTUCKCLOSED.BAT

C>IF CONTROLLER3<C3AUTOMATICHANDLE><FREQUENCY BELOW 1200 HZ> = = <AUTOMATICEMERGENCYSWITCH2><CLOSED>

C>IF CONTROLLER3<32AUTOMATICHANDLE><FREQUENCY BELOW 1200 HZ> = = <DELAY COUNTER><2SECONDS>

THEN

C><AUTOMATICEMERGNCYSWTICH3><REMAINS OPEN>!!!WARNING AUTOMATIC EMERGENCY SWITCH STUCK CLOSED!!!<SPACE><ENTER>

ERRORCODEdiagnosticcodeZ16

C3AUTOMATICEMERGENCYSWITCHSTUCKCLOSED.BAT

C:\AUTOERRORCODE.EXE COPY

C:\ERRORCODEdiagnosticcodeZ16\C3AUTOMATICEMERGENCYSWITCHSTUCKCLOSED.BAT

C:\AUTOERRORCODE.EXE COPY

C:\ERRORCODEdiagnosticcodeZ16\C3AUTOMATICEMERGENCYSWITCHSTUCKCLOS

ED.BAT FAULTCODE1.COM

C:\AUTOERRORCODE.EXE COPY

C:ERRORCODEdiagnostic codeZ16\C3AUTOMATICEMERGENCYSWITCHSTUCKCLOSED.BAT FAULTBIN.BAT /V

THE TIME IS <SPACE>t_THE DATE IS <SPACE>d

C:\TROUBLESHOOT.EXE\Diagnostic Code Z16_No C3 Controller.TXT<OPEN TEXT VIEWER Y/N>

C>CCB.SYS<CONTROLLERNO1><SELECTED>AIR BRAKE CONTROLLER NUMBER 3 FAILURE - SWTICH TO CONTROLLER NUMBER 1<SPACE><ENTER> = = <FAULTCODEZ16><CLEAR>

OR

C>CCB.SYS<CONTROLLERNO2><SELECTED>AIR BRAKE CONTROLLER NUMBER 3 FAILURE - SWTICH TO CONTROLLER NUMBER 2<SPACE><ENTER> = = <FAULTCODEZ16><CLEAR>

C:CONTROLLERNUMBER3.SYS<C3AUTOMATICHANDLE><EMERGENCYPOSITION> = = <AUTOEMERGENCYSWITCH><OPEN>

THEN

C:\C3AUTOMATICEMERGENCYSWITCHSTUCKCLOSED.EXE <FAULT CLEAR\RESET>

Diagnostic Code Z17(C3 Independent Handle Frequency Low):

CCB.EXE

CCB.CONFIG.SYS<ON>

AIRBRAKESELFTEST.EXE<CHECKDRIVER>

CONTROLLER3.SYS<ON/OFF> ON

C3INDEPENENTHANDLE.SYS<RELEASE POSITION> = = <OPERATIONAL>

C3INDEPENDENTHANDLEFREQUENCYLOW.BAT

C><C3INDEPENDENTHANDLE.SYS><BELOW 2729 HZ> !!!WARNING-AIR BRAKE FAILURE - GRADUATED INDEPENDENT BRAKING IS NOT AVAILABLE!!!

C>><C3INDEPENDENTHANDLE.SYS><BELOW 2729 HZ> = = <INDEPENDENTBRAKES><FULL APPLIED>

C3INDEPENDENTHANDLEFREQUENCYLOW.BAT

ERRORCODEdiagnosticcodeZ17/C3INDEPENDENTHANDLEFREQUENCYLOW.BAT

C:C3INDEPENDENTHANDLEFREQUENCYLOW.BAT

C:AUTOERRORCODE.EXE COPY

C:/ERRORCODEdiagnosticcodeZ17/C3INDEPENDENTHANDLEFREQUENCYLOW.BAT FAULTCODE1.COM

C:/ERRORCODEdiagnosticcodeZ17/C3INDEPENDENTHANDLEFREQUENCYLOW.BAT FAULTCODE2.COM

C:/ERRORCODEdiagnosticcodeZ17/C3INDEPENDENTHANDLEFREQUENCYLOW.BAT FAULTBIN.BAT /V

THE TIME IS <SPACE>t_THE DATE IS <SPACE>d

C:\TROUBLESHOOT.EXE\Diagnostic Code Z17_No C3 Controller.TXT<OPEN TEXT VIEWER Y/N>

C>CCB.SYS<CONTROLLERNO1><SELECTED>AIR BRAKE CONTROLLER NUMBER 3 FAILURE - SWTICH TO CONTROLLER NUMBER 1<SPACE><ENTER>

OR

C>CCB.SYS<CONTROLLERNO2><SELECTED>AIR BRAKE CONTROLLER NUMBER 3 FAILURE - SWTICH TO CONTROLLER NUMBER 2<SPACE><ENTER>

C> C3AUTOMATICHANDLEFREQUENCYHIGH.BAT<RETURNING TO CONTROLLER NUMBER 3> = = <RESULT PENALTY BRAKE APPLICATION>

C>CCB.EXE\CONTROLLER3.SYS

C> CONTROLLER3.SYS<RESET> CHECK DRIVER AIRBRAKESELFTEST.EXE

C> <FUALTCODEZ17><CLEAR> = = <AIRBRAKESELFTEST><PASS>

Diagnostic Code Z18(C3 Independent Handle Frequency High):CCB.EXE

CCB.CONFIG.SYS<ON>

AIRBRAKESELFTEST.EXE<CHECKDRIVER>

CONTROLLER3.SYS<ON/OFF> ON

C3INDEPENENTHANDLE.SYS<RELEASE POSITION> = = <OPERATIONAL>

C3INDEPENDENTHANDLEFREQUENCYHIGH.BAT

C><C3INDEPENDENTHANDLE.SYS><ABOVE 11489 HZ> !!!WARNING-AIR BRAKE FAILURE - GRADUATED INDEPENDENT BRAKING IS NOT AVAILABLE!!!

C>><C3INDEPENDENTHANDLE.SYS><ABOVE 11489 HZ> = = <INDEPENDENTBRAKES><FULL APPLIED>

C3INDEPENDENTHANDLEFREQUENCYLOW.BAT

ERRORCODEdiagnosticcodeZ18/C3INDEPENDENTHANDLEFREQUENCYLOW.BAT

C:C3INDEPENDENTHANDLEFREQUENCYLOW.BAT

C:AUTOERRORCODE.EXE COPY

C:/ERRORCODEdiagnosticcodeZ18/C3INDEPENDENTHANDLEFREQUENCYLOW.BAT FAULTCODE1.COM

FAULT CODE1.COM = DEFECTIVE CONTROLLER

C:/ERRORCODEdiagnosticcodeZ18/C3INDEPENDENTHANDLEFREQUENCYLOW.BAT FAULTCODE2.COM

FAULT CODE2.COM= FAULT WIRING

C:/ERRORCODEdiagnosticcodeZ18/C3INDEPENDENTHANDLEFREQUENCYLOW.BAT FAULTBIN.BAT /V

THE TIME IS <SPACE>t_THE DATE IS <SPACE>d

C:\TROUBLESHOOT.EXE\Diagnostic Code Z18_No C3 Controller.TXT<OPEN TEXT VIEWER Y/N>

C>CCB.SYS<CONTROLLERNO1><SELECTED>AIR BRAKE CONTROLLER NUMBER 3 FAILURE - SWTICH TO CONTROLLER NUMBER 1<SPACE><ENTER> Y/N

OR

C>CCB.SYS<CONTROLLERNO2><SELECTED>AIR BRAKE CONTROLLER NUMBER 3 FAILURE - SWTICH TO

CONTROLLER NUMBER 2<SPACE><ENTER> Y/N

C>CCB.EXE\CONTROLLER3.SYS

C> CONTROLLER3.SYS<RESET> CHECK DRIVER AIRBRAKESELFTEST.EXE

C> <FUALTCODEZ18><CLEAR> = = <AIRBRAKESELFTEST><PASS>

Diagnostic Code Z19(C3 Independent Release Switch Stuck Open)

INDEPENDENTRELEASESWITCH3.SYS<CLOSED>

CONTROLLER3.SYS

C3INDEPENDENTHANDLE.SYS<RELEASE>

DELAYCOUNTER.SYS

C3INDEPENDENTRELEASESWITCH3STUCKOPEN.BAT

C><C3INDEPENDENTHANDLE.SYS><GREATER THAN OR EQUAL TO 11000HZ> = = <DELAYCOUNTER><2SECONDS>

THEN

C><INDEPENDENTRELEASESWITCH3><OPEN> = = <MESSAGE> C3 NDEPENDENT RELEASE SWITCH STUCK OPEN<SPACE><ENTER>

C3NDEPENDENTRELEASESWITCH3TUCKOPEN.BAT

ERRORCODEdiagnosticcodeZ19/C3INDEPENDENTRELEASESWITCH2STUCKOPEN.BAT

C:/C3INDEPENDENTRELEASESWITCH3STUCKOPEN.BAT

C:AUTOERRORCODE.EXE COPY

C;/ERRORCODEdiagnosticcodeZ19/C3INDEPENDENTRELEASESWITCH2STUCKOPEN.BAT FAULTCODE1.COM

C:/ERRORCODEdiagnosticcodeZ19/C3INDEPENDENTRELEASESWITCH2STUCKOPEN.BAT FAULTBIN.BAT /V

THE TIME IS <SPACE>t_THE DATE IS <SPACE>d

C:\TROUBLESHOOT.EXE\Diagnostic Code Z19_No C3 Controller.TXT<OPEN TEXT VIEWER Y/N>

C:<FAULTCODEZ19><CLEAR> = = <C3INDEPENDENTHANDLE><RELEASE>

Diagnostic Code ZA(C3 Independent Release Switch Stuck Closed):

INDEPENDENTRELEASESWITCH3.SYS<CLOSED>

CONTROLLER3.SYS

C3INDEPENDENTHANDLE.SYS<RELEASE>

DELAYCOUNTER.SYS

C3INDEPENDENTRELEASESWITCH3STUCKOPEN.BAT

C><**C3INDEPENDENTHANDLE.SYS><BELOW 10589 HZ> = = <DELAYCOUNTER><2SECONDS>**

THEN

C><INDEPENDENTSWITCH><CLOSED> = = <MESSAGE:CODEZA>C3 INDEPENDENT RELEASE SWITCH STUCK CLOSED<SPACE><ENTER>

C3INDEPENDENTRELEASESWITCH3STUCKOPEN.BAT

ERRORCODEdiagnosticcodeZA/C3INDEPENDENTRELEASESWITCH1STUCKOPEN.BAT

C:/C3INDEPENDENTRELEASESWITCH3STUCKOPEN.BAT

C:/AUTOERRORCODE.EXE COPY

C:ERRORCODEdiagnosticcodeZA/C3INDEPENDENTRELEASESWITCH3STUCKOPEN.BAT FAULTCODE1.COM

C:ERRORCODEdiagnosticcodeZA/C3INDEPENDENTRELEASESWITCH3STUCKOPEN.BAT FAULTBIN/BAT /V

THE TIME IS <SPACE>t_THE DATE IS <SPACE>d

C:\TROUBLESHOOT.EXE\Diagnostic Code ZA_No C3 Controller.TXT<OPEN TEXT VIEWER Y/N>

C:<FAULTCODEZA><CLEAR> = = <C3INDEPENDENTHANDLE><RELEASE>

Diagnostic Code ZB(C3 Independent Max Switch Stuck Open):

INDEPENDENTMAXSWITCH3.SYS

CONTROLLER3.SYS

C3INDEPENDENTHANDLE.SYS

DELAYCOUNTER.SYS

C3INDEPENTDENTMAXSWITCHSTUCKOPEN.BAT

C><C3INDEPENDENTHANDLE.SYS><EQUALTO OR BELOW 3218 HZ> = = <DELAYCOUNTER><2SECONDS>

THEN

C><C3NDEPENDENTMAXSWITCH><OPEN> = = <MESSAGECODE:ZB>C3 IDEPENDENT MAX SWITCH STUCK OPEN<SPACE><ENTER>

C3INDEPENTDENTMAXSWITCHSTUCKOPEN.BAT

ERRORCODEdiagnosticcodeZB/C3INDEPENTDENTMAXSWITCHSTUCKOPEN.BAT

C:/C3INDEPENTDENTMAXSWITCHSTUCKOPEN.BAT

C:AUTOERRORCODE.EXE COPY

C:ERRORCODEdiagnosticcodeZB/C3INDEPENTDENTMAXSWITCHSTUCKOPEN.BAT FAULTCODE1.COM

C:ERRORCODEdiagnosticcodeZB/C3INDEPENTDENTMAXSWITCHSTUCKOPEN.BAT FAULTBIN/BAT /V

THE TIME IS <SPACE>t_THE DATE IS <SPACE>d

C:\TROUBLESHOOT.EXE\Diagnostic Code ZB_No C3 Controller.TXT<OPEN TEXT VIEWER Y/N>

C:<FAULTCODEZB><CLEAR> = = <C3INDEPENDENTHANDLE><FULLPOSITION>

Diagnostic Code ZC(C3 Independent Max Switch Stuck Closed):

INDEPENDENTMAXSWITCH3.SYS

CONTROLLER3.SYS

C3INDEPENDENTHANDLE.SYS

DELAYCOUNTER.SYS

C3INDEPENTDENTMAXSWITCHSTUCKCLOSED.BAT

C>C3INDEPENDENTHANDLE.SYS><GREATER THAN 3629 HZ> = = <DELAYCOUNTER.SYS><2SECONDS>

THEN

C><C3INDEPENDENTMAXSWITCH><CLOSED> = = <MESSAGECODE:ZC>C3 INDEPENDENT MAX SWITCH STUCK CLOSED<SPACE><ENTER>

C3INDEPENTDENTMAXSWITCHSTUCKCLOSED.BAT

ERRORCODEdiagnosticcodeZC/C3INDEPENTDENTMAXSWITCHSTUCKCLOSED.BAT

C:/C3INDEPENTDENTMAXSWITCHSTUCKCLOSED.BAT

C:/AUTOERRORCODE.EXE COPY

C:/ERRORCODEdiagnosticcodeZC/C3INDEPENTDENTMAXSWITCHSTUCKCLOSED.BAT FAULTCODE1.COM

C:/ERRORCODEdiagnosticcodeZC/C3INDEPENTDENTMAXSWITCHSTUCKCLOSED.BAT FAULTBIN/BAT /V

THE TIME IS <SPACE>t_THE DATE IS <SPACE>d

C:\TROUBLESHOOT.EXE\Diagnostic Code ZC_No C3 Controller.TXT<OPEN TEXT VIEWER Y/N>

C:<FAULTCODEZC><CLEAR> = = <C3INDEPENDENTHANDLE><OTHER THAN FULLPOSITION>

Diagnostic Code ZD(C3 Bail Off Switch Stuck Closed):

CCB.EXE

BAILOFFSWITCH3.SYS<OPEN>

CONTROLLER3.SYS

C3INDEPENDENTHANDLE.SYS<NON DEPRESSED>

COUNTER.SYS

BRAKECYLINDER.SYS

C3BAILOFFSWITCHSTUCKCLOSED.BAT

C><BAILOFFSWITCH3><READS CLOSED FOR 50SECONDS> = = <MESSAGE:ZD>BAIL OFF SWITCH STUCK CLOSED<SPACE><ENTER>

C><MESSAGE:ZD><PRIOR 10 SECONDS BEFORE LOGGING> = = <OVERRIDE:BAILOFFREQUEST><BRAKE CYLINDER RISE TO EMERGENCY>

C>PROMPT OPERATOR<RELEASE AND RE-DEPRESS BAIL OFF> = = <BRAKECYLINDER><RELEASE> Y/N

THEN

C>IF <BAILOFFSWITCH3><REMAINS CLOSED> = = <CONTINUE OVERRIDE C1BAILOFF REQUEST Y/N><MESSAGE AIR BRAKE FAILURE - BAIL OFF IS NOT AVAILABLE>

C3BAILOFFSWITCHSTUCKCLOSED.BAT

ERRORCODEdiagnosticcodeZD/C3BAILOFFSWITCHSTUCKCLOSED.BAT

C:AUTOERRORCODE.EXE COPY

C:/ERRORCODEdiagnosticcodeZD/C3BAILOFFSWITCHSTUCKCLOSED.BAT FAULTCODE1.COM

FAULTCODE1.COM

FAULTCODE1=SHORT<CLOSED CIRCUIT> IN BAIL OFF WIRING

FUALTCODE2.COM

FAULTCODE2=CONTINOUS DEPRESSION OF BAIL OFF RING

C:AUTOERRORCODE.EXE COPY

C:/ERRORCODEdiagnosticcodeZD/C3BAILOFFSWITCHSTUCKCLOSED.BAT

FAULTBIN.BAT /V

THE TIME IS <SPACE>t_THE DATE IS <SPACE>d

C:<FAULTCODEZD><CLEARS> = = <C3BAILOFFSWITCH><OPENS>

C>CCB.SYS<CONTROLLERNO1><SELECTED>AIR BRAKE FAILURE -BAIL OFF IS NOT AVAILAVLE - SWTICH TO CONTROLLER NUMBER 1<SPACE><ENTER>

OR

C>CCB.SYS<CONTROLLERNO2><SELECTED>AIR BRAKE FAILURE -BAIL OFF IS NOT AVAILAVLE - SWTICH TO CONTROLLER NUMBER 2<SPACE><ENTER>

C:\TROUBLESHOOT.EXE\Diagnostic Code ZD_No C3 Controller.TXT<OPEN TEXT VIEWER Y/N>

```
GOTO FAULTBIN
c>FAULTBIN.BAT
c:\FAULTBIN>
STORE
the time is<SPACE>$t$_the date is<space>$d$
C:\FAULTBIN>ADD TO FAULTBIN DIRECTORY?<SPACE><ENTER>
C:AUTOERRORCODE.EXE> ERRORCODE.BAT> COPY (FAULT CODE).DOC TO FAULTBIN.BAT
C:AUTOERRORCODE.EXE> COPY ERRORCODE.BAT FAULT CODE .DOC
C:AUTOERRORCODE.EXE> COPY ERRORCODE.DOC FAULTBIN.BAT /V
c:\FAULTBIN>DISPLAY ERRORCODE ENTRIES?<SPACE><ENTER>
c:\FAULTBNIN>DIR ERRORCODE*
c:\FAULBIN> PRINT FAULTBIN?<SPACE><ENTER>
c:\FAULTBIN.BAT PRN

c:FAULTBIN.EXE/clear screen Y/N?
```

MODE SELECTION CODES

LEAD/TRAIL SWITCHES OPEN

ERRORCODElead/trialswithswitchesopen.BAT

ERRORCODElead/trialswithswitchesopen.BAT

C> ERRORCODElead/trialswithswitchesopen.BAT

CONTROLLER1=:C\LEAD/TRAILSWITCH1.SYS

CONTROLLER2=:C\LEAD/TRAILSWITCH2.SYS

CONTROLLER3=:C\LEAD/TRAILSWITCH3.SYS

C> LEAD/TRAILSWITCH1.SYS<ACTIVE>
THEN
C><C\LEAD/TRAILSWITCH2.SYS><DEACTIVE> = = <C\LEAD/TRAILSWITCH3.SYS><DEACTIVE>
C> LEAD/TRAILSWITCH2.SYS<ACTIVE>
THEN
C><C\LEAD/TRAILSWITCH1.SYS><DEACTIVE> = = <C\LEAD/TRAILSWITCH3.SYS><DEACTIVE>
C> LEAD/TRAILSWITCH3.SYS<ACTIVE>
THEN
C><C\LEAD/TRAILSWITCH1.SYS><DEACTIVE> = = <C\LEAD/TRAILSWITCH2.SYS><DEACTIVE>
C> LEAD/TRAILSWITCH1.SYS<ACTIVE>
THEN
C><C\LEAD/TRAILSWITCH2.SYS><ACTIVE> = = <C\LEAD/TRAILSWITCH22SYS><DEACTIVE>
C> LEAD/TRAILSWITCH1.SYS<DEACTIVE>
THEN
C><C\LEAD/TRAILSWITCH2.SYS><ACTIVE> = = <C\LEAD/TRAILSWITCH3.SYS><ACTIVE>

C> LEAD/TRAILSWITCH1.SYS<DEACTIVE>
THEN
C><C\LEAD/TRAILSWITCH2.SYS><ACTIVE> = = <C\LEAD/TRAILSWITCH3.SYS><ACTIVE>
C

LEAD/TRAILSWITCH1OPEN.CONFIG.SYS<ACTIVE/DEACTIVE>

C>lead/trailswitch1.sys<open>

C>lead/trailswitch2.sys<closed>

C>lead/trailswitch3.sys<closed>

C>IF <lead/trailswitch2.sys><open> = = <lead/trailswitch1.sys><open>WARNING!!! LEAD/TRAIL SWTICH OPEN FAULT<SPACE><ENTER>

C>IF <lead/trailswitch2.sys><open> = = <lead/trailswitch3.sys><open>WARNING!!! LEAD/TRAIL SWTICH OPEN FAULT<SPACE><ENTER>

C>IF <lead/trailswitch3.sys><open> = = <lead/trailswitch1.sys><open>WARNING!!! LEAD/TRAIL SWTICH OPEN FAULT<SPACE><ENTER>

C>

C:AUTOERRORCODE.EXE COPY ERRORCODElead/trialswithswitchesopen.exe/leadtrailswitchesopenfaultcode40.com

C:AUTOERRORCODE.EXE COPY ERRORCODElead/trialswithswitchesopen.BAT FAULTBIN.BAT /V

the time is <space>t_the date is<space>d

C>IF <lead/trailswitch2.sys><closed> = = <lead/trailswitch1.sys><open>WARNING!!! LEAD/TRAIL SWTICH CLOSED FAULT<SPACE><ENTER>

C>IF <lead/trailswitch2.sys><open> = = <lead/trailswitch3.sys><closed>WARNING!!! LEAD/TRAIL SWTICH CLOSED FAULT<SPACE><ENTER>

C>IF <lead/trailswitch3.sys><closed> = = <lead/trailswitch1.sys><open>WARNING!!! LEAD/TRAIL SWTICH CLOSED FAULT<SPACE><ENTER>

C>

C:AUTOERRORCODE.EXE COPY ERRORCODElead/trialswithswitchesopen.exe/leadtrailswitchesopenfaultcode40.com

C:AUTOERRORCODE.EXE COPY ERRORCODElead/trialswithswitchesopen.BAT FAULTBIN.BAT /V

the time is <space>t_the date is<space>d

C> IF LEAD/TRAILSWITCH1OPEN.CONFIG.SYS<DEACTIVATED><WARNING!!!

LEAD/TRAILSWITCH2OPEN.CONFIG.SYS<ACTIVE/DEACTIVE>

C>lead/trailswitch1.sys<closed>

C>lead/trailswitch2.sys<open>

C>lead/trailswitch3.sys<closed>

LEAD/TRAILSWITCH3OPEN.CONFIG.SYS<ACTIVE/DEACTIVE>

C>lead/trailswitch1.sys<closed>

C>lead/trailswitch2.sys<closed>

C>lead/trailswitch3.sys<open>

CONTROLLER1LEAD/TAILSWITCHSTUCKOPENFAULT.BAT

CONTROLLER2LEAD/TAILSWITCHSTUCKOPENFAULT.BAT

CONTROLLER3LEAD/TAILSWITCHSTUCKOPENFAULT.BAT

CONTROLLER1LEAD/TAILSWITCHFAILUREFAULT.BAT

CONTROLLER2LEAD/TAILSWITCHFAILUREFAULT.BAT

CONTROLLER3LEAD/TAILSWITCHFAILUREFAULT.BAT

CONTROLLER1LEAD/TAILSWITCHCHANGEATSPEEDFAULT.BAT

CONTROLLER2LEAD/TAILSWITCHCHANGEATSPEEDFAULT.BAT

CONTROLLER3LEAD/TAILSWITCHCHANGEATSPEEDFAULT.BAT

C>IF LEAD/TRAILSWITCH1.SYS<ACTIVE>

C> C>LEAD/TRAILSWITCH1.SYS<OPENS>

C>IF <LEAD/TRAILSWITCH2OPEN.CONFIG.SYS> = = <LEAD/TRAILSWITCH3OPEN.CONFIG.SYS>

LEAD TRIAL SWITHES CLOSED

C1 LEAD/TRAIL SWITHCES STUCK OPEN

C1 LEAD/TRAIL SWITHCES FAILURE

C1 LEAD/TRAIL SWITCHES CHANGE AT SPEED

C2 LEAD/TRAIL SWITHCES STUCK OPEN

C2 LEAD/TRAIL SWITHCES FAILURE

C2 LEAD/TRAIL SWITCHES CHANGE AT SPEED

C3 LEAD/TRAIL SWITHCES STUCK OPEN

C3 LEAD/TRAIL SWITHCES FAILURE

C3 LEAD/TRAIL SWITCHES CHANGE AT SPEED

PASSENGER/GOODS SWITCHES STUCK OPEN

PASSENGER/GOODS SWITCHES STUCK CLOSED

PASSENGER/GOODS SWITCH CHANGE SPEED

MODE SELECTION CODES

LEAD/TRAIL SWITCHES OPEN

ERRORCODElead/trialswithswitchesopen.BAT

ERRORCODElead/trialswithswitchesopen.BAT

C> ERRORCODElead/trialswithswitchesopen.BAT

LEAD/TRAILCONTROLLER.SYS.CONFIG.

CONTROLLER1=:C\LEAD/TRAILSWITCH1.SYS

CONTROLLER2=:C\LEAD/TRAILSWITCH2.SYS

CONTROLLER3=:C\LEAD/TRAILSWITCH3.SYS

LEAD/TRAILSWITCH1OPEN.CONFIG.SYS<ACTIVE>

C>lead/trailswitch1.sys<open>

C>lead/trailswitch2.sys<closed>

C>lead/trailswitch3.sys<closed>

LEAD/TRAILSWITCH2OPEN.CONFIG.SYS<ACTIVE>

C>lead/trailswitch1.sys<closed>

C>lead/trailswitch2.sys<open>

C>lead/trailswitch3.sys<closed>

LEAD/TRAILSWITCH3OPEN.CONFIG.SYS<ACTIVE>

C>lead/trailswitch1.sys<closed>

C>lead/trailswitch2.sys<closed>

C>lead/trailswitch3.sys<open>

CONTROLLER1LEAD/TAILSWITCHSTUCKOPENFAULT.BAT

CONTROLLER2LEAD/TAILSWITCHSTUCKOPENFAULT.BAT

CONTROLLER3LEAD/TAILSWITCHSTUCKOPENFAULT.BAT

C>IF <lead/trailswitch2.sys><open> = = <lead/trailswitch1.sys><open>WARNING!!! LEAD/TRAIL SWTICH OPEN FAULT<SPACE><ENTER>

C>IF <lead/trailswitch2.sys><open> = = <lead/trailswitch3.sys><open>WARNING!!! LEAD/TRAIL

SWTICH OPEN FAULT<SPACE><ENTER>

C>IF <lead/trailswitch3.sys><open> = = <lead/trailswitch1.sys><open>WARNING!!! LEAD/TRAIL SWTICH OPEN FAULT<SPACE><ENTER>

C>

C:AUTOERRORCODE.EXE COPY ERRORCODElead/trialswithswitchesopen.exe/leadtrailswitchesopenfaultcode40.com

C:AUTOERRORCODE.EXE COPY ERRORCODElead/trialswithswitchesopen.BAT FAULTBIN.BAT /V

the time is <space>t_the date is<space>d

C>IF <lead/trailswitch2.sys><closed> = = <lead/trailswitch1.sys><open>WARNING!!! LEAD/TRAIL SWTICH CLOSED FAULT<SPACE><ENTER>

C>IF <lead/trailswitch2.sys><open> = = <lead/trailswitch3.sys><closed>WARNING!!! LEAD/TRAIL SWTICH CLOSED FAULT<SPACE><ENTER>

C>IF <lead/trailswitch3.sys><closed> = = <lead/trailswitch1.sys><open>WARNING!!! LEAD/TRAIL SWTICH CLOSED FAULT<SPACE><ENTER>

C>

C:AUTOERRORCODE.EXE COPY ERRORCODElead/trialswithswitchesopen.exe/leadtrailswitchesopenfaultcode40.com

C:AUTOERRORCODE.EXE COPY ERRORCODElead/trialswithswitchesopen.BAT FAULTBIN.BAT /V

the time is <space>t_the date is<space>d

CONTROLLER1LEAD/TAILSWITCHFAILUREFAULT.BAT

CONTROLLER2LEAD/TAILSWITCHFAILUREFAULT.BAT

CONTROLLER3LEAD/TAILSWITCHFAILUREFAULT.BAT

C>IF <LEAD/TRAILCONTROLLER.SYS.CONFIG.><closed>LEAD/TRAIL SWTICH CLOSED FAULT<SPACE><ENTER>

C>

C:AUTOERRORCODE.EXE COPY ERRORCODElead/TAILSWITCHFAILUREFAULT.EXE/

leadtrailswitchesopenfaultcode41.com

C:AUTOERRORCODE.EXE COPY ERRORCODElead/TAILSWITCHFAILUREFAULT.BAT FAULTBIN.BAT /V

the time is <space>t_the date is<space>d

CONTROLLERLEAD/TAILSWITCHCHANGEATSPEEDFAULT.BAT

CONTROLLER1LEAD/TAILSWITCHCHANGEATSPEEDFAULT.BAT

CONTROLLER2LEAD/TAILSWITCHCHANGEATSPEEDFAULT.BAT

CONTROLLER3LEAD/TAILSWITCHCHANGEATSPEEDFAULT.BAT

C> IF <trialswithswitchesopen.exe> <SPEEDS>0MPH>WARNING!!! REDUCE SPEED TO ZERO MPH<SPACE><ENTER>

THEN

C> LEAD/TRAILCONTROLLER.SYS.CONFIG.<RESET> Y/N?<SPACE><ENTER>

C:AUTOERRORCODE.EXE COPY ERRORCODEcontrollerlead/switchchangeatspeedfault.exe faultcode.com

C:AUTOERRORCODE.EXE COPY ERRORCODEcontrollerlead/switchchangeatspeedfault FAULTBIN.BAT /V

the time is <space>t_the date is <space>d

C> IF <lead/trailswitch2.sys><open> = = <lead/trailswitch1.sys><open>WARNING!!! LEAD/TRAIL SWTICH OPEN FAULT<SPACE><ENTER>

C>IF <lead/trailswitch2.sys><open> = = <lead/trailswitch3.sys><open>WARNING!!! LEAD/TRAIL SWTICH OPEN FAULT<SPACE><ENTER>

C>IF <lead/trailswitch3.sys><open> = = <lead/trailswitch1.sys><open>WARNING!!! LEAD/TRAIL SWTICH OPEN FAULT<SPACE><ENTER>

C>

C:AUTOERRORCODE.EXE COPY ERRORCODElead/trialswithswitchesopen.exe/leadtrailswitchesopenfaultcode40.com

C:AUTOERRORCODE.EXE COPY ERRORCODElead/trialswithswitchesopen.BAT FAULTBIN.BAT /V

the time is <space>t_the date is<space>d

MODE SELECTION CODES

LEAD/TRAIL SWITCHES OPEN

ERRORCODElead/trialswithswitchesopen.BAT

ERRORCODElead/trialswithswitchesopen.BAT

C> ERRORCODElead/trialswithswitchesopen.BAT

LEAD/TRAILCONTROLLER.SYS.CONFIG.

CONTROLLER1=:C\LEAD/TRAILSWITCH1.SYS

CONTROLLER2=:C\LEAD/TRAILSWITCH2.SYS

CONTROLLER3=:C\LEAD/TRAILSWITCH3.SYS

LEAD/TRAILSWITCH1OPEN.CONFIG.SYS<ACTIVE>

C>lead/trailswitch1.sys<open>

C>lead/trailswitch2.sys<closed>

C>lead/trailswitch3.sys<closed>

LEAD/TRAILSWITCH2OPEN.CONFIG.SYS<ACTIVE>

C>lead/trailswitch1.sys<closed>

C>lead/trailswitch2.sys<open>

C>lead/trailswitch3.sys<closed>

LEAD/TRAILSWITCH3OPEN.CONFIG.SYS<ACTIVE>

C>lead/trailswitch1.sys<closed>

C>lead/trailswitch2.sys<closed>

C>lead/trailswitch3.sys<open>

CONTROLLER1LEAD/TAILSWITCHSTUCKOPENFAULT.BAT

CONTROLLER2LEAD/TAILSWITCHSTUCKOPENFAULT.BAT

CONTROLLER3LEAD/TAILSWITCHSTUCKOPENFAULT.BAT

C>IF <lead/trailswitch2.sys><open> = = <lead/trailswitch1.sys><open>WARNING!!! LEAD/TRAIL SWTICH OPEN FAULT<SPACE><ENTER>

C>IF <lead/trailswitch2.sys><open> = = <lead/trailswitch3.sys><open>WARNING!!! LEAD/TRAIL

SWTICH OPEN FAULT<SPACE><ENTER>

C>IF <lead/trailswitch3.sys><open> = = <lead/trailswitch1.sys><open>WARNING!!! LEAD/TRAIL SWTICH OPEN FAULT<SPACE><ENTER>

C>

C:AUTOERRORCODE.EXE COPY ERRORCODElead/trialswithswitchesopen.exe/leadtrailswitchesopenfaultcode40.com

C:AUTOERRORCODE.EXE COPY ERRORCODElead/trialswithswitchesopen.BAT FAULTBIN.BAT /V

the time is <space>t_the date is<space>d

C>IF <lead/trailswitch2.sys><closed> = = <lead/trailswitch1.sys><open>WARNING!!! LEAD/TRAIL SWTICH CLOSED FAULT<SPACE><ENTER>

C>IF <lead/trailswitch2.sys><open> = = <lead/trailswitch3.sys><closed>WARNING!!! LEAD/TRAIL SWTICH CLOSED FAULT<SPACE><ENTER>

C>IF <lead/trailswitch3.sys><closed> = = <lead/trailswitch1.sys><open>WARNING!!! LEAD/TRAIL SWTICH CLOSED FAULT<SPACE><ENTER>

C>

C:AUTOERRORCODE.EXE COPY ERRORCODElead/trialswithswitchesopen.exe/leadtrailswitchesopenfaultcode40.com

C:AUTOERRORCODE.EXE COPY ERRORCODElead/trialswithswitchesopen.BAT FAULTBIN.BAT /V

the time is <space>t_the date is<space>d

CONTROLLER1LEAD/TAILSWITCHFAILUREFAULT.BAT

CONTROLLER2LEAD/TAILSWITCHFAILUREFAULT.BAT

CONTROLLER3LEAD/TAILSWITCHFAILUREFAULT.BAT

C>IF <LEAD/TRAILCONTROLLER.SYS.CONFIG.><closed>LEAD/TRAIL SWTICH CLOSED FAULT<SPACE><ENTER>

C>

C:AUTOERRORCODE.EXE COPY ERRORCODElead/TAILSWITCHFAILUREFAULT.EXE/

leadtrailswitchesopenfaultcode41.com

C:AUTOERRORCODE.EXE COPY ERRORCODElead/TAILSWITCHFAILUREFAULT.BAT FAULTBIN.BAT /V

the time is <space>t_the date is<space>d

CONTROLLERLEAD/TAILSWITCHCHANGEATSPEEDFAULT.BAT

CONTROLLER1LEAD/TAILSWITCHCHANGEATSPEEDFAULT.BAT

CONTROLLER2LEAD/TAILSWITCHCHANGEATSPEEDFAULT.BAT

CONTROLLER3LEAD/TAILSWITCHCHANGEATSPEEDFAULT.BAT

C> IF <trialswithswitchesopen.exe> <SPEEDS>0MPH>WARNING!!! REDUCE SPEED TO ZERO MPH<SPACE><ENTER>

THEN

C> LEAD/TRAILCONTROLLER.SYS.CONFIG.<RESET> Y/N?<SPACE><ENTER>

C:AUTOERRORCODE.EXE COPY ERRORCODEcontrollerlead/switchchangeatspeedfault.exe faultcode.com

C:AUTOERRORCODE.EXE COPY ERRORCODEcontrollerlead/switchchangeatspeedfault FAULTBIN.BAT /V

the time is <space>t_the date is <space>d

C> IF <lead/trailswitch2.sys><open> = = <lead/trailswitch1.sys><open>WARNING!!! LEAD/TRAIL SWTICH OPEN FAULT<SPACE><ENTER>

C>IF <lead/trailswitch2.sys><open> = = <lead/trailswitch3.sys><open>WARNING!!! LEAD/TRAIL SWTICH OPEN FAULT<SPACE><ENTER>

C>IF <lead/trailswitch3.sys><open> = = <lead/trailswitch1.sys><open>WARNING!!! LEAD/TRAIL SWTICH OPEN FAULT<SPACE><ENTER>

C>

C:AUTOERRORCODE.EXE COPY ERRORCODElead/trialswithswitchesopen.exe/leadtrailswitchesopenfaultcode40.com

C:AUTOERRORCODE.EXE COPY ERRORCODElead/trialswithswitchesopen.BAT FAULTBIN.BAT /V

the time is <space>t_the date is<space>d

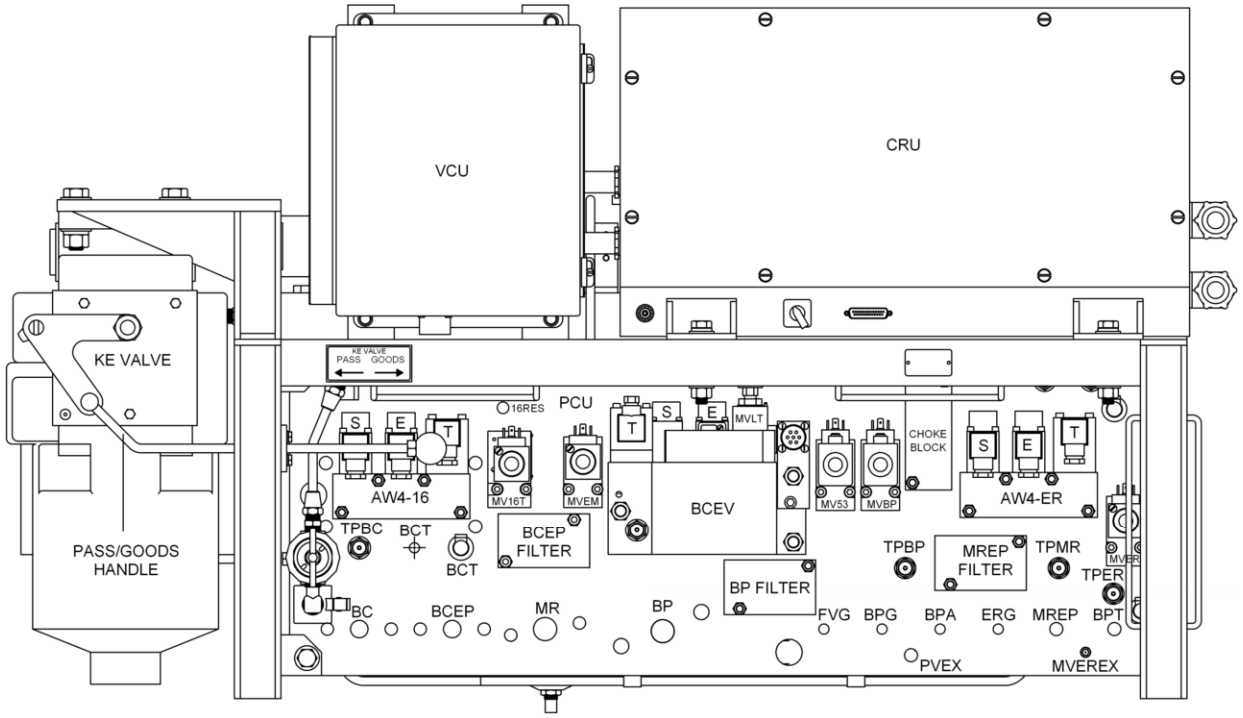

FRONT SIDE OF BRAKE RACK

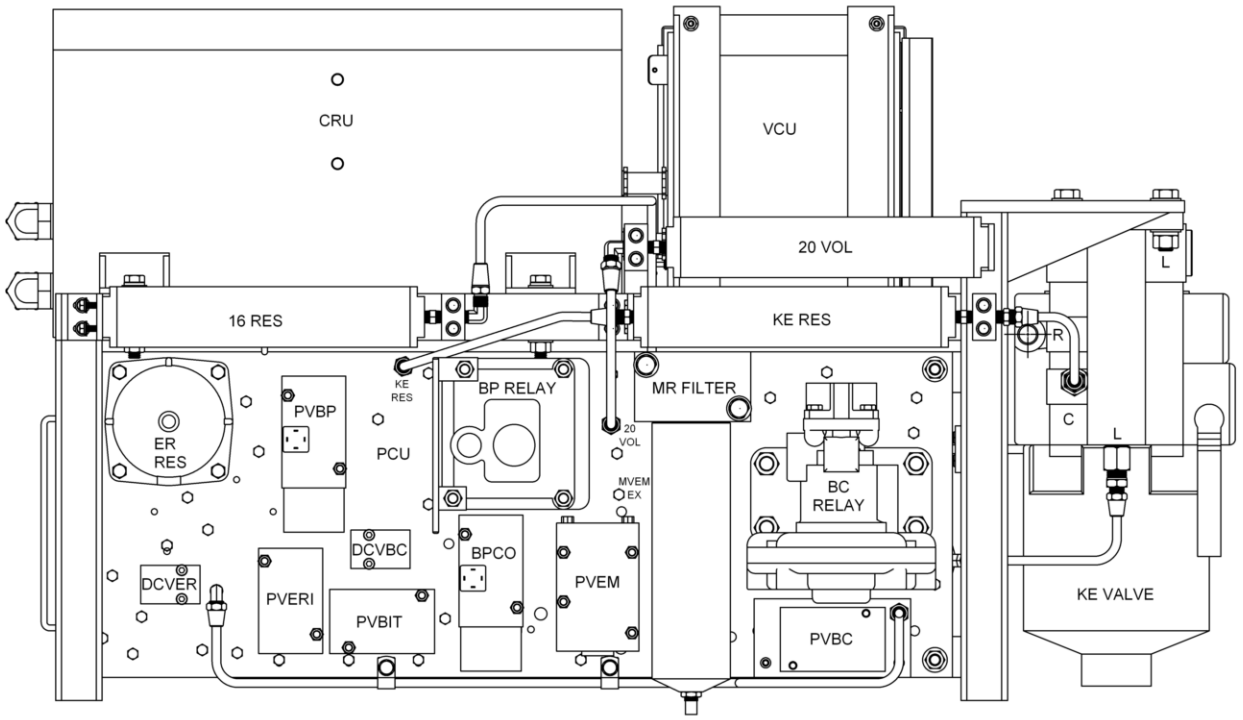

REAR SIDE OF BRAKE RACK

FIGURE 1-1 BRAKE BAY RACK ASSEMBLY

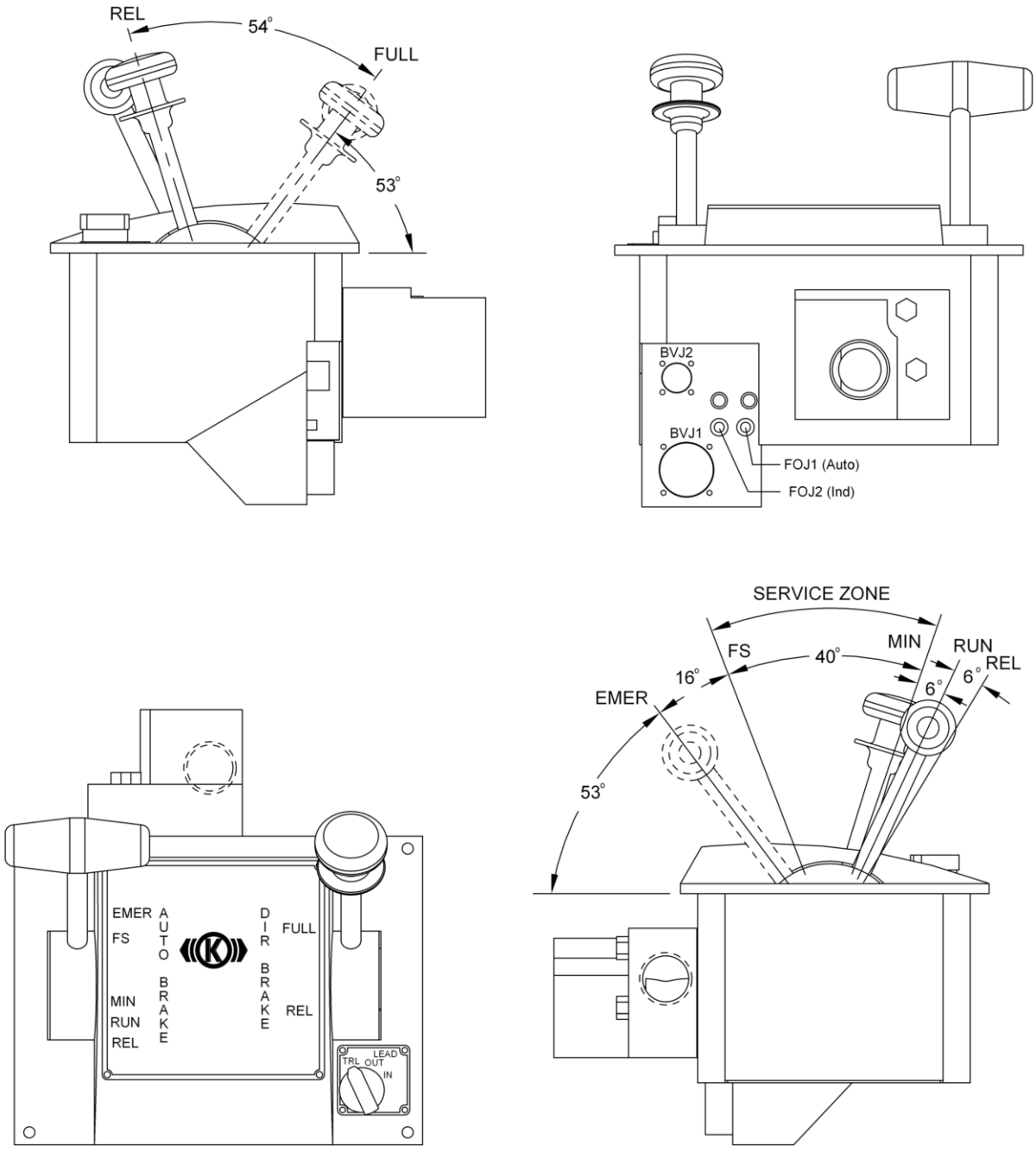

FIGURE 1-2 BRAKE VALVE CONTROLLER

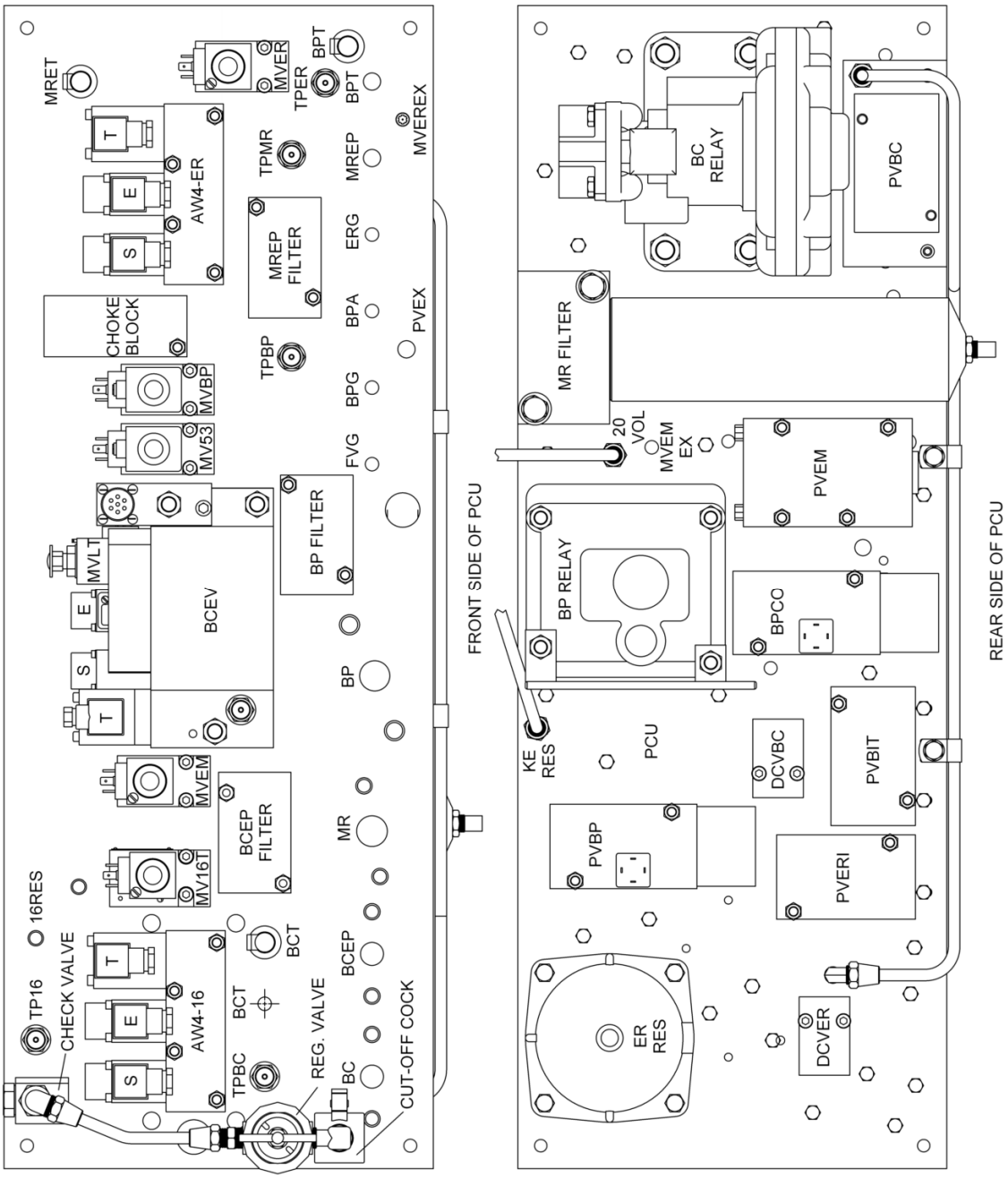

FIGURE 1-3 PNEUMATIC CONTROL UNIT

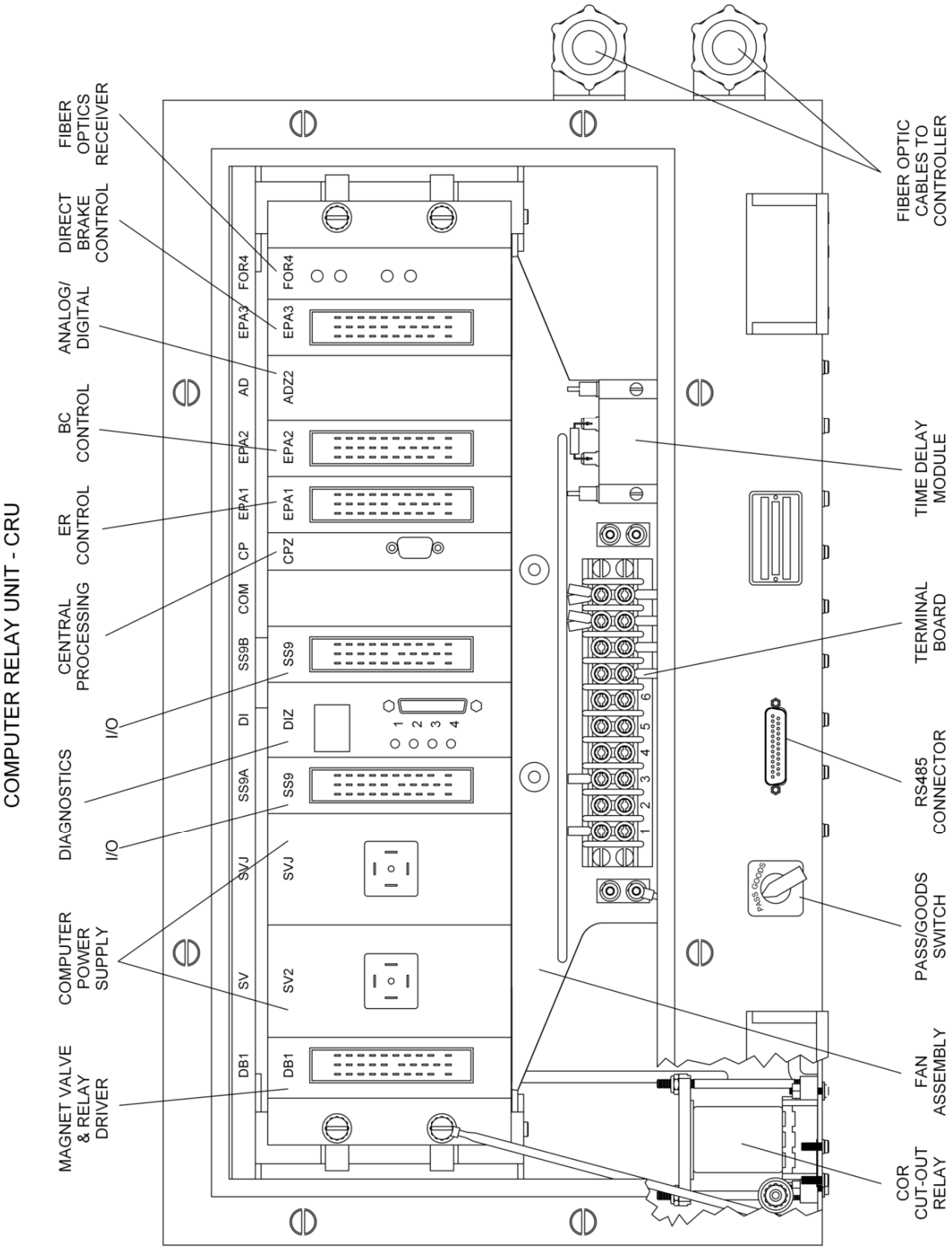

FIGURE 1-4 COMPUTER RELAY UNIT

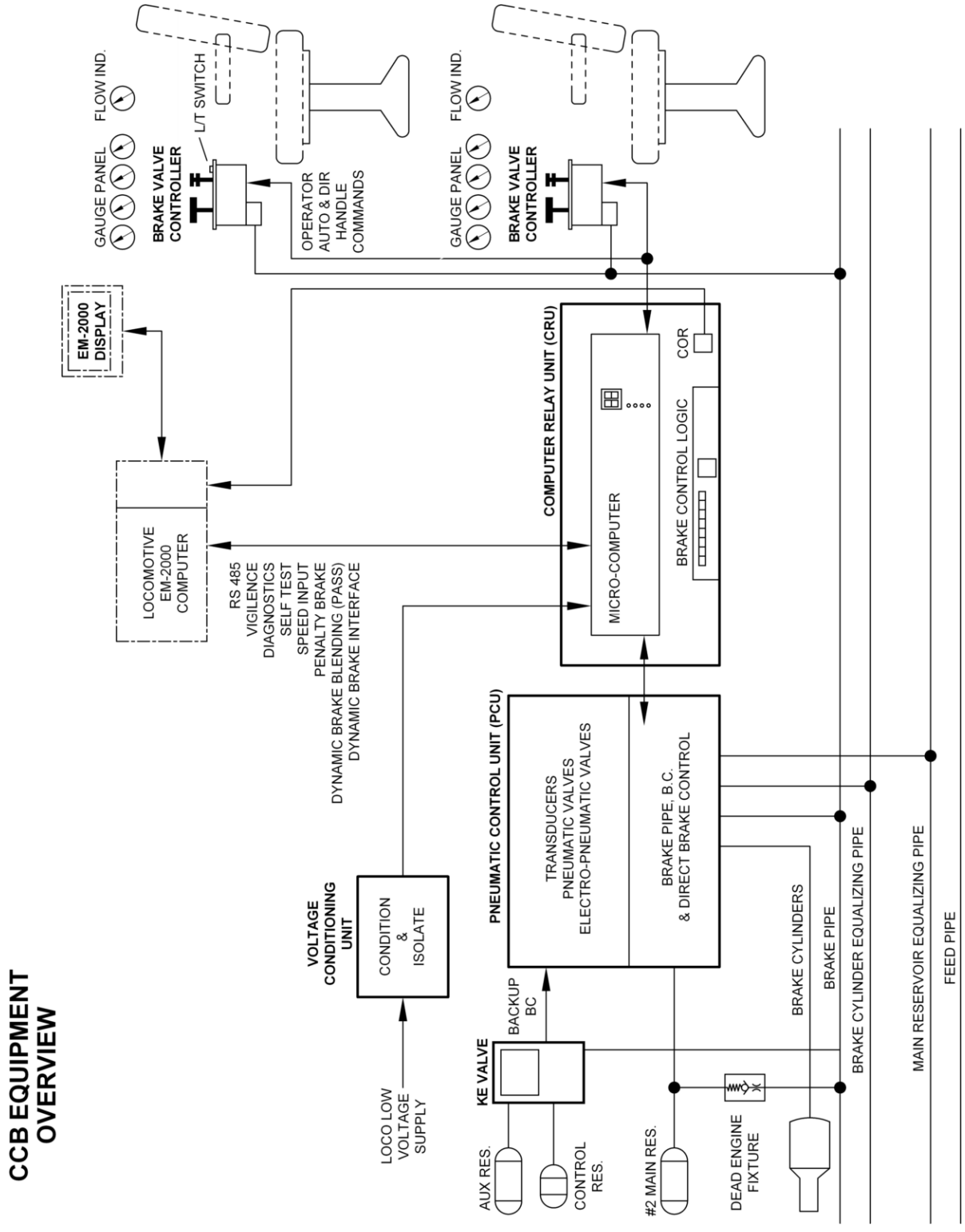

FIGURE 1-5 CCB CONFIGURATION

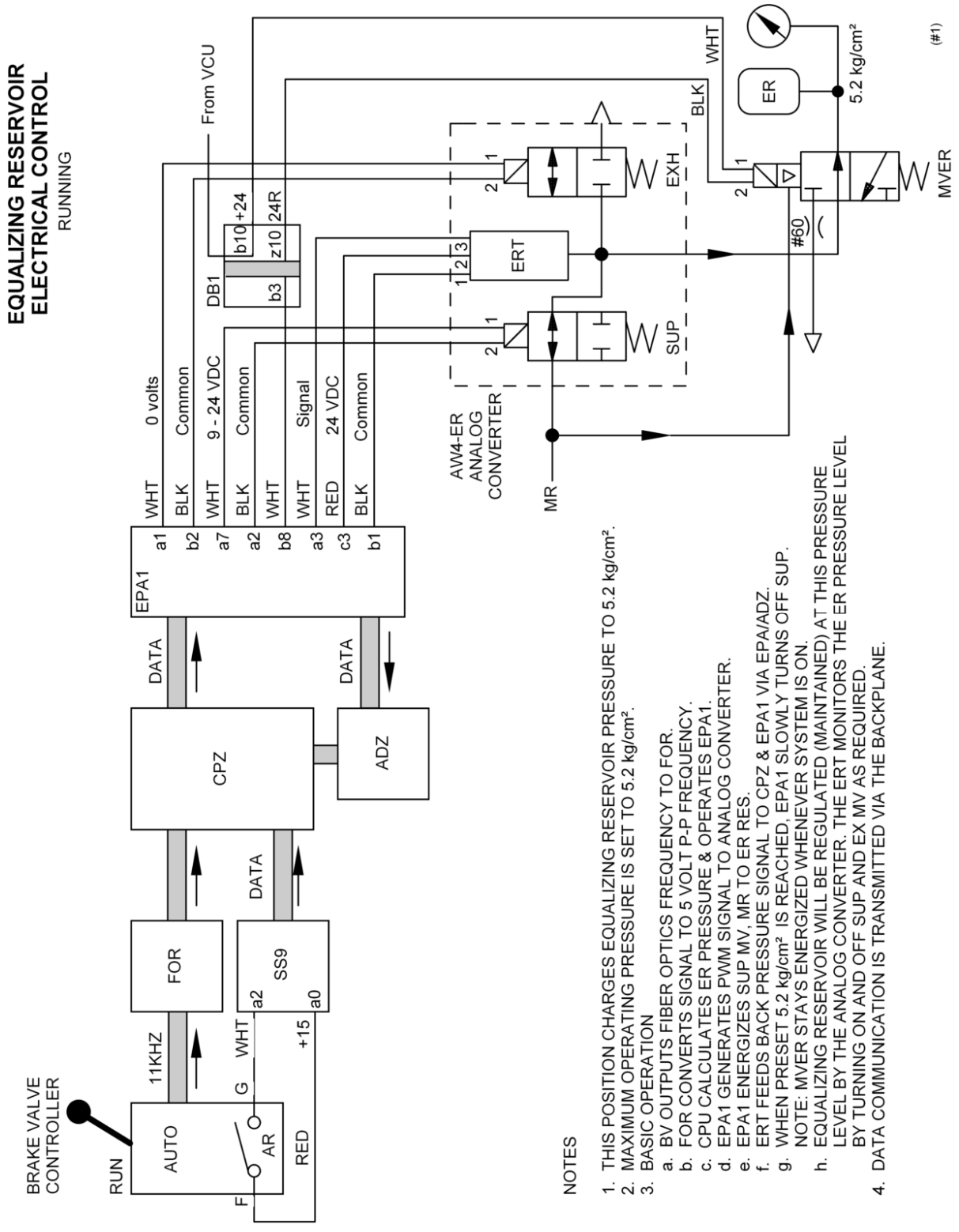

FIGURE 1-6 EQUALIZING RESERVOIR ELECTRICAL CONTROL – RUNNING

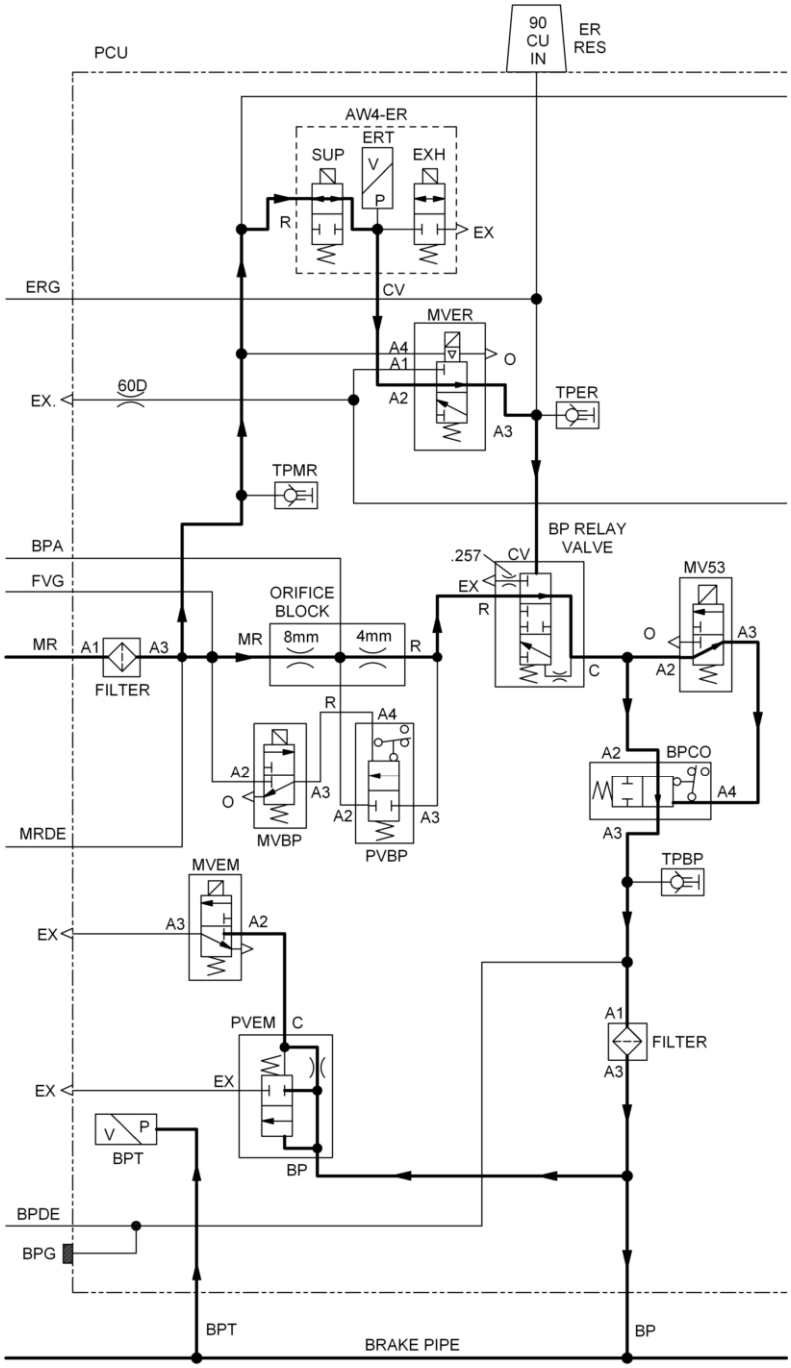

AW4-ER SUP. M.V.	-	ENERGIZED
AW4-ER EXH. M.V.	-	DE-ENERGIZED
MVER	-	ENERGIZED
MV53	-	DE-ENERGIZED

(#1)

FIGURE 1-7 EQUALIZING RESERVOIR AND BRAKE PIPE CONTROL – RUNNING

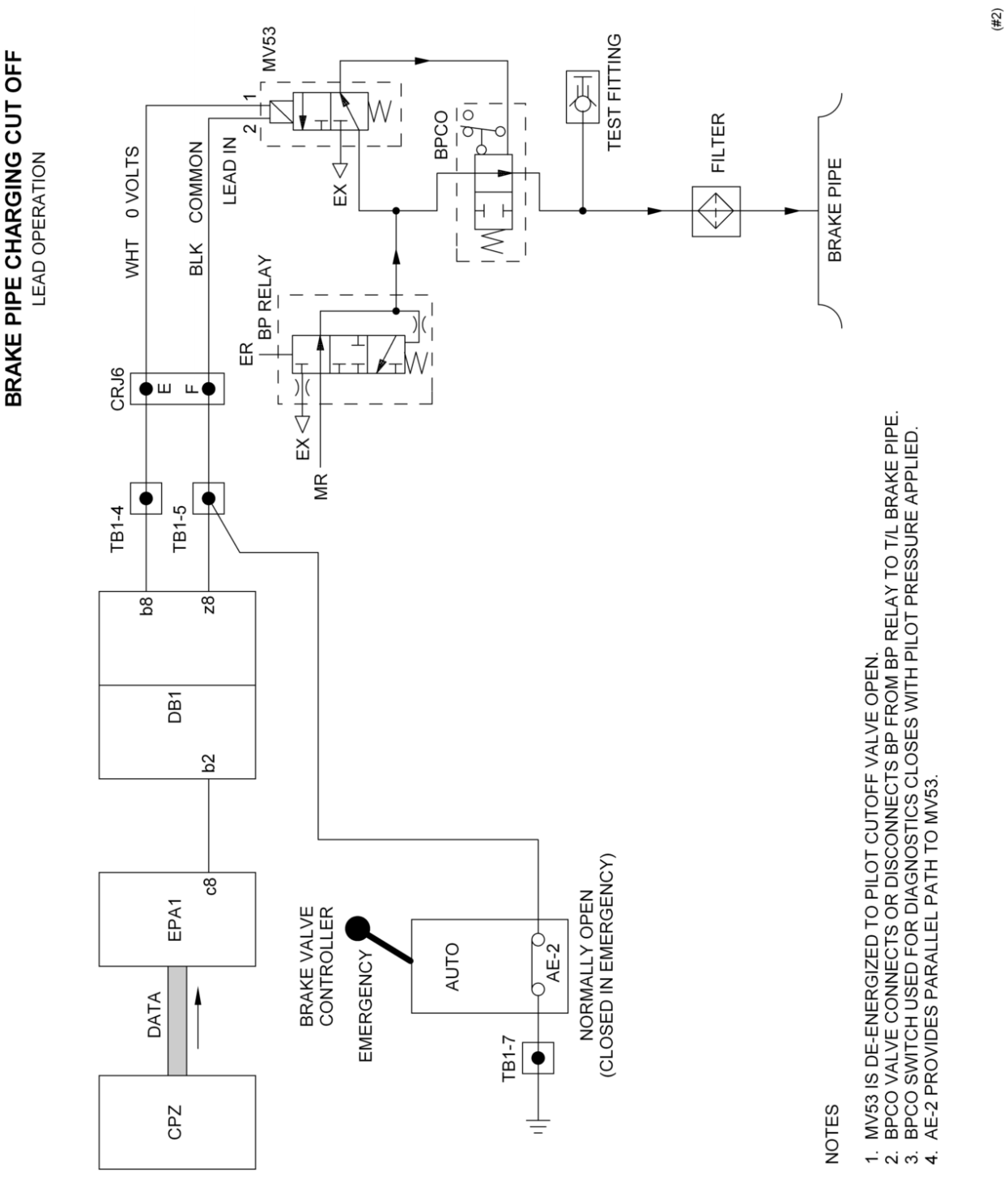

FIGURE 1-8 BRAKE PIPE CHARGING CUT-OFF - LEAD OPERATION

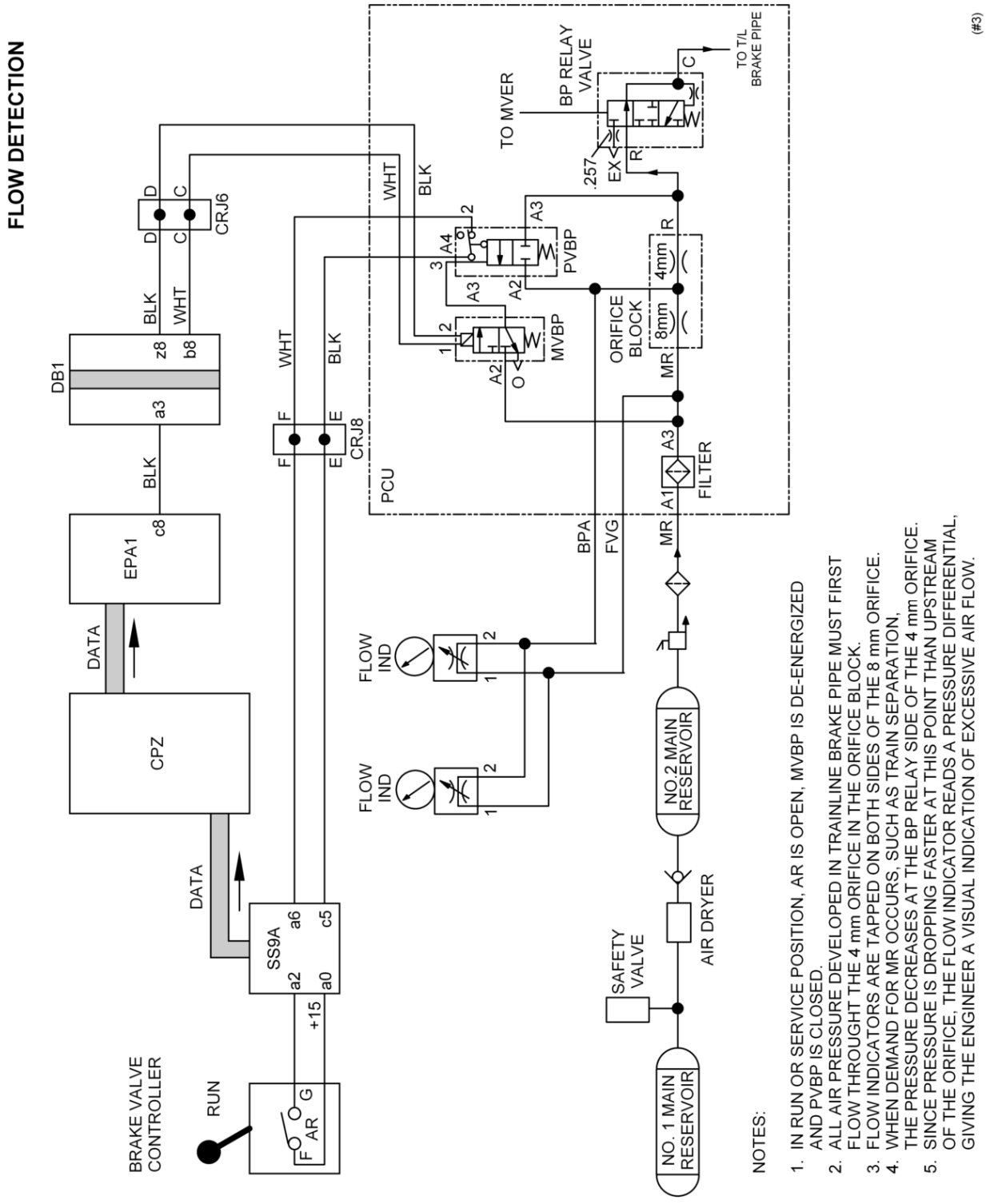

FIGURE 1-9 FLOW DETECTION

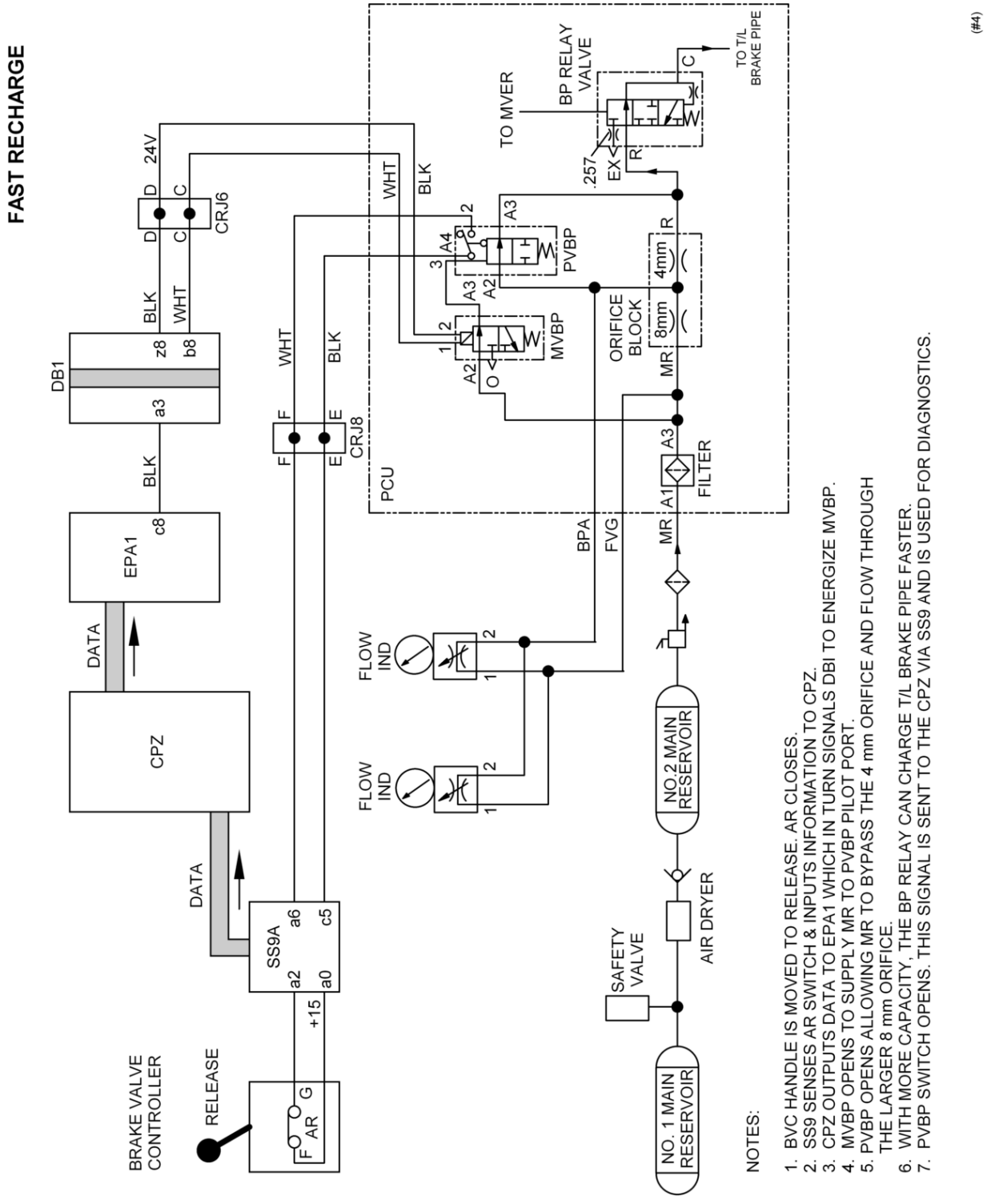

FIGURE 1-10 FAST RECHARGE

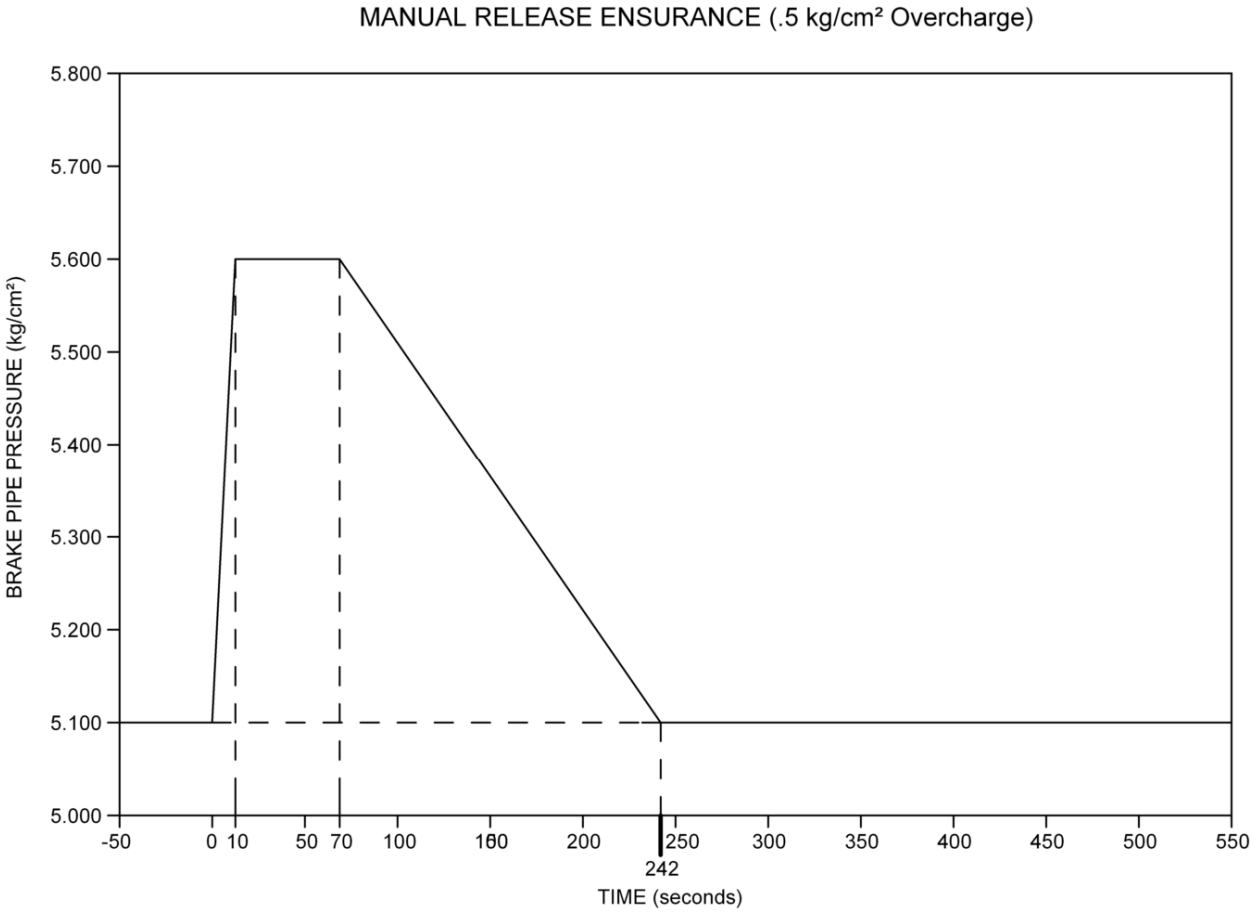

FIGURE 1-11 OVERCHARGE AND ASSIMILATION

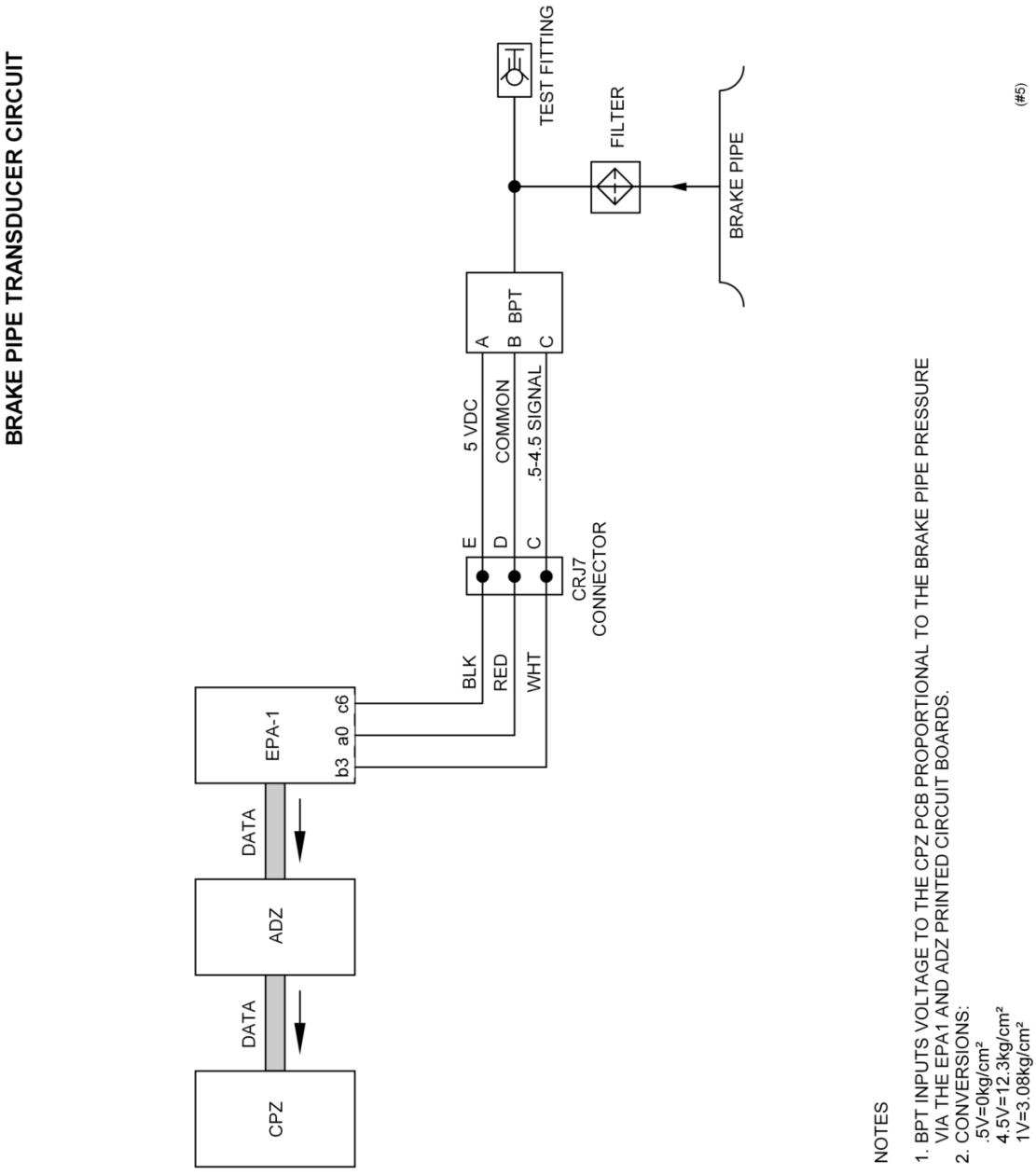

FIGURE 1-12 BRAKE PIPE TRANSDUCER CIRCUIT

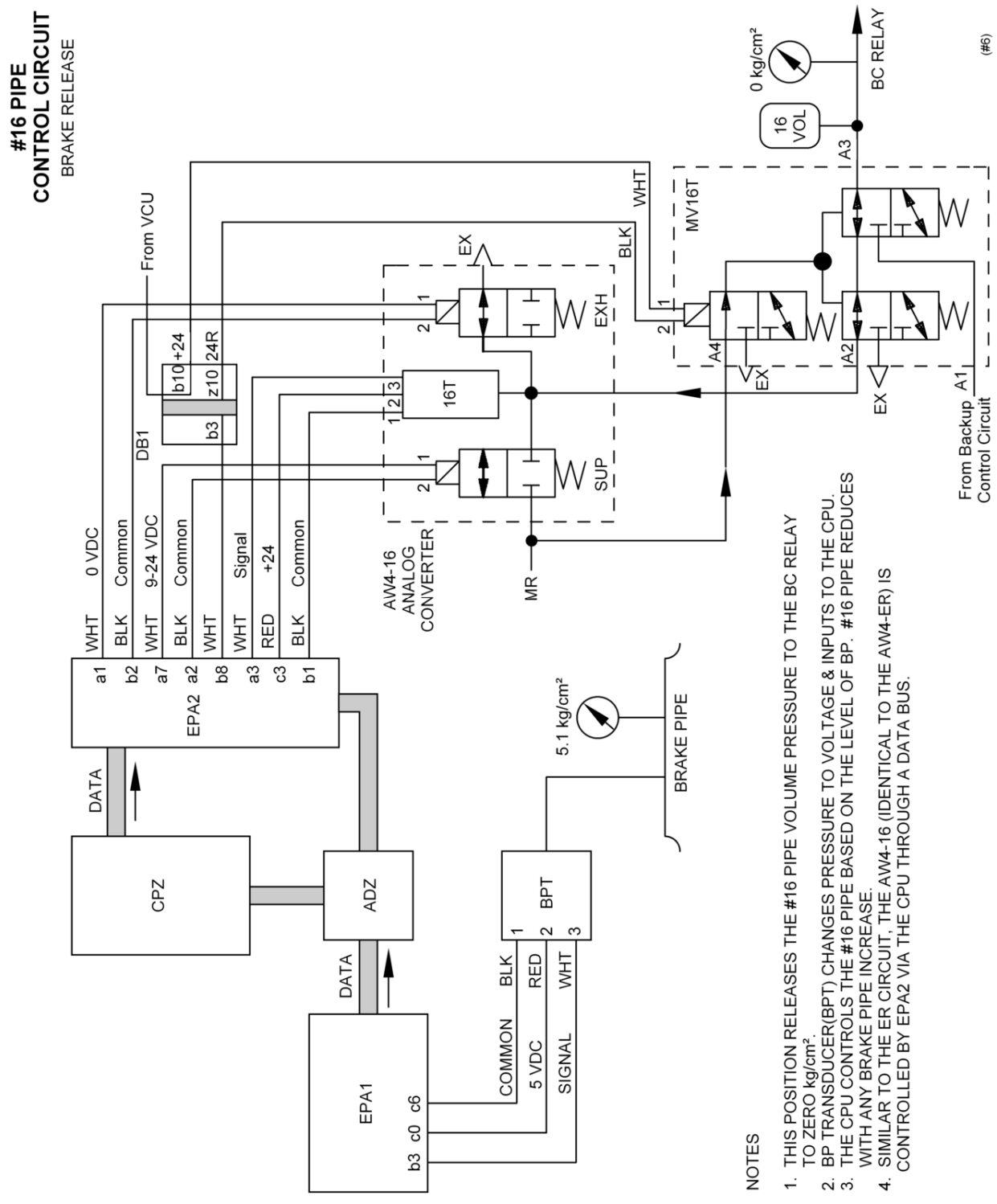

FIGURE 1-13 #16 PIPE CONTROL CIRCUIT - BRAKE RELEASE

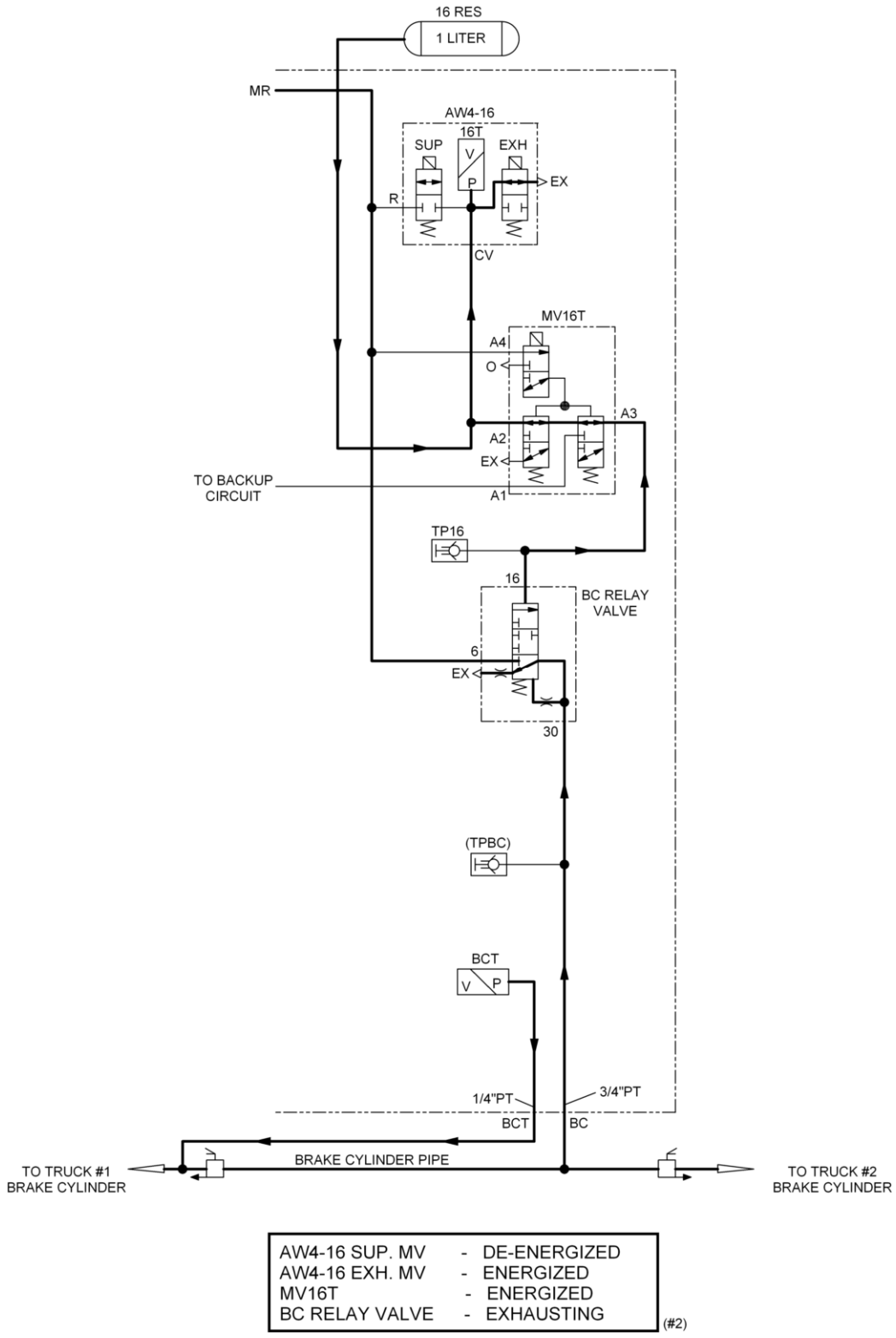

FIGURE 1-14 AUTOMATIC RELEASE BRAKE CYLINDER PRESSURE CONTROL

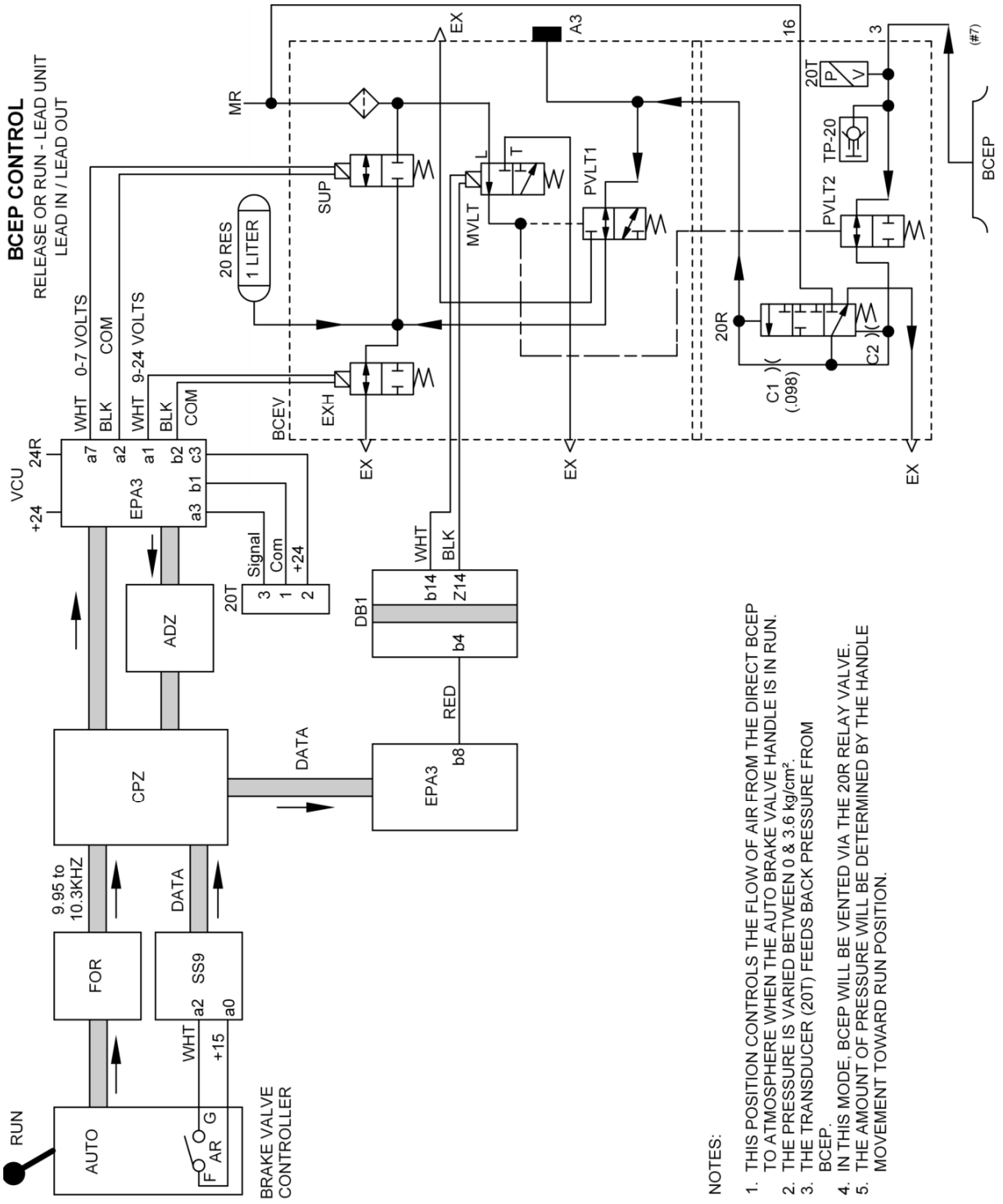

FIGURE 1-15 BRAKE CYLINDER EQUALIZING PIPE CONTROL
RELEASE OR RUN - LEAD UNIT - LEAD IN / LEAD OUT

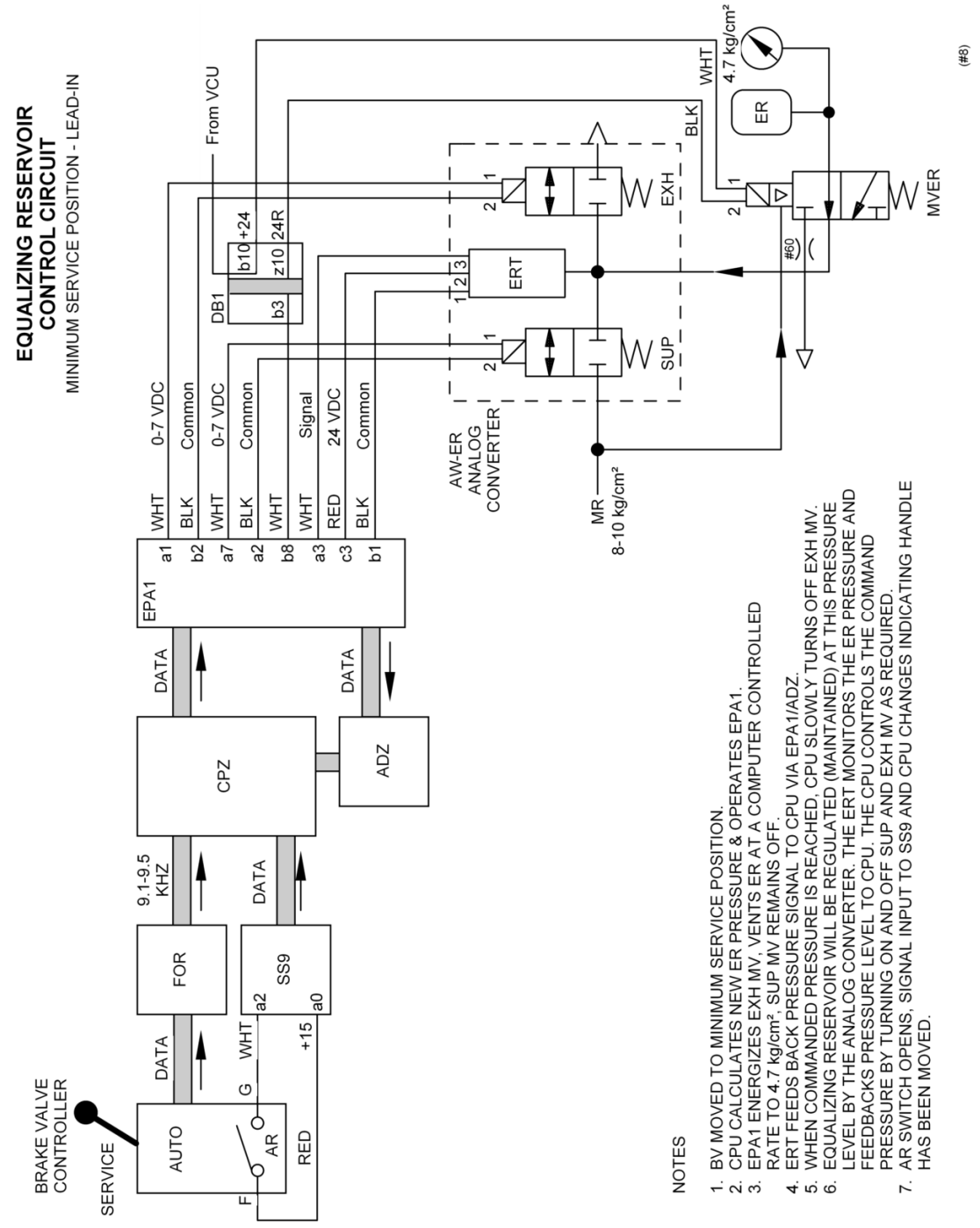

FIGURE 1-16 ER CONTROL CIRCUIT - MINIMUM SERVICE POSITION - LEAD-IN

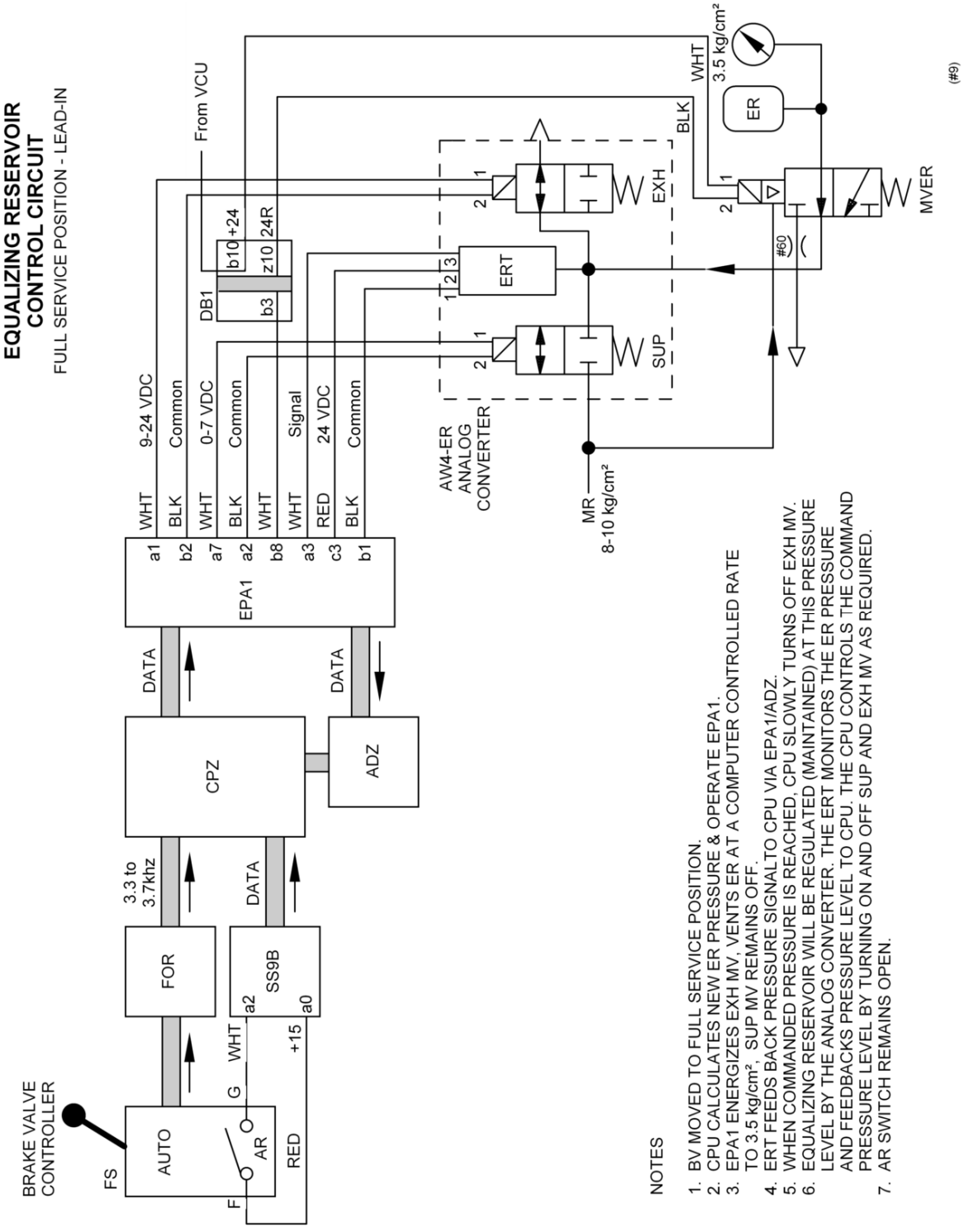

FIGURE 1-17 ER CONTROL CIRCUIT - FULL SERVICE POSITION - LEAD-IN

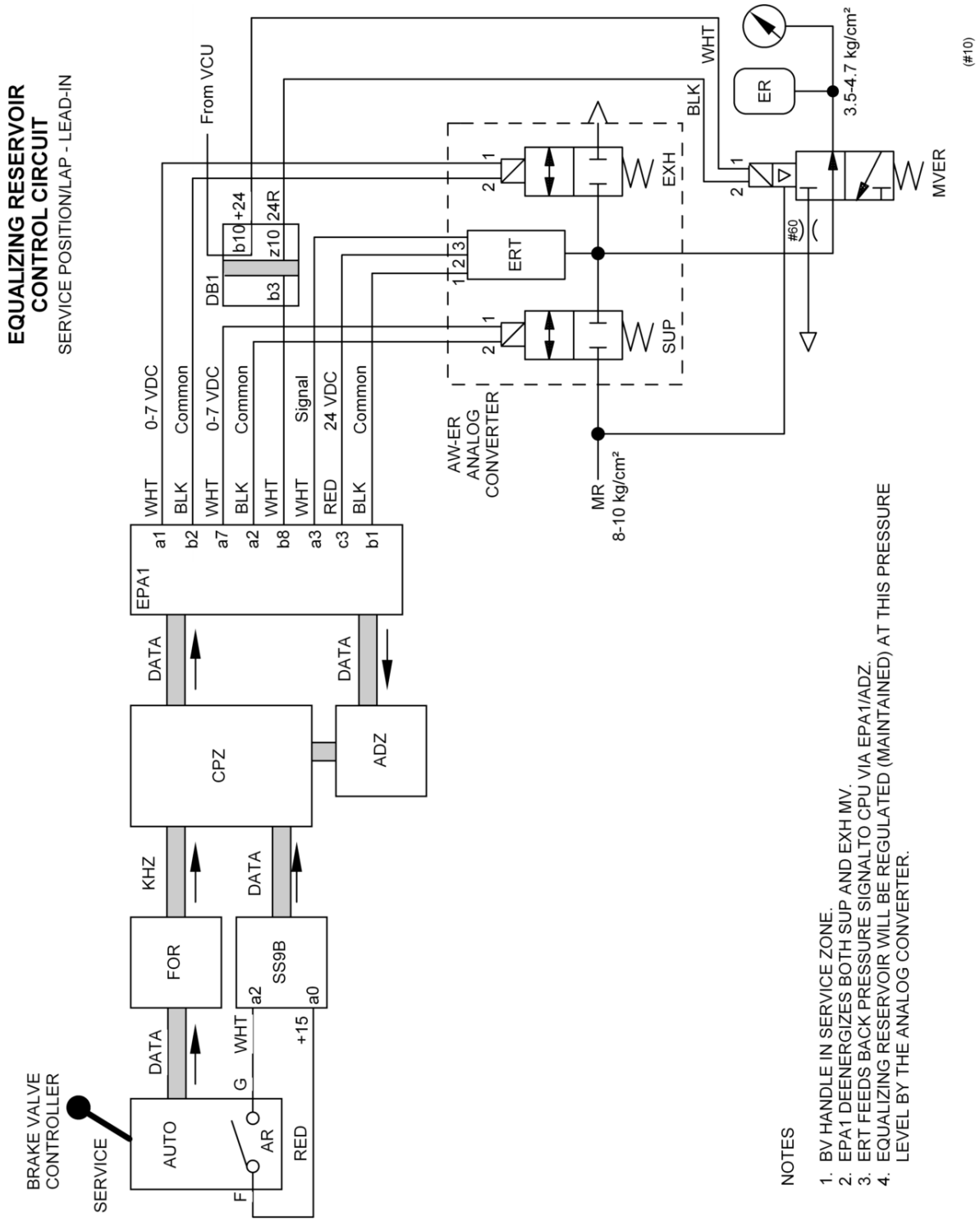

FIGURE 1-18 ER CONTROL CIRCUIT - SERVICE POSITION/LAP - LEAD-IN

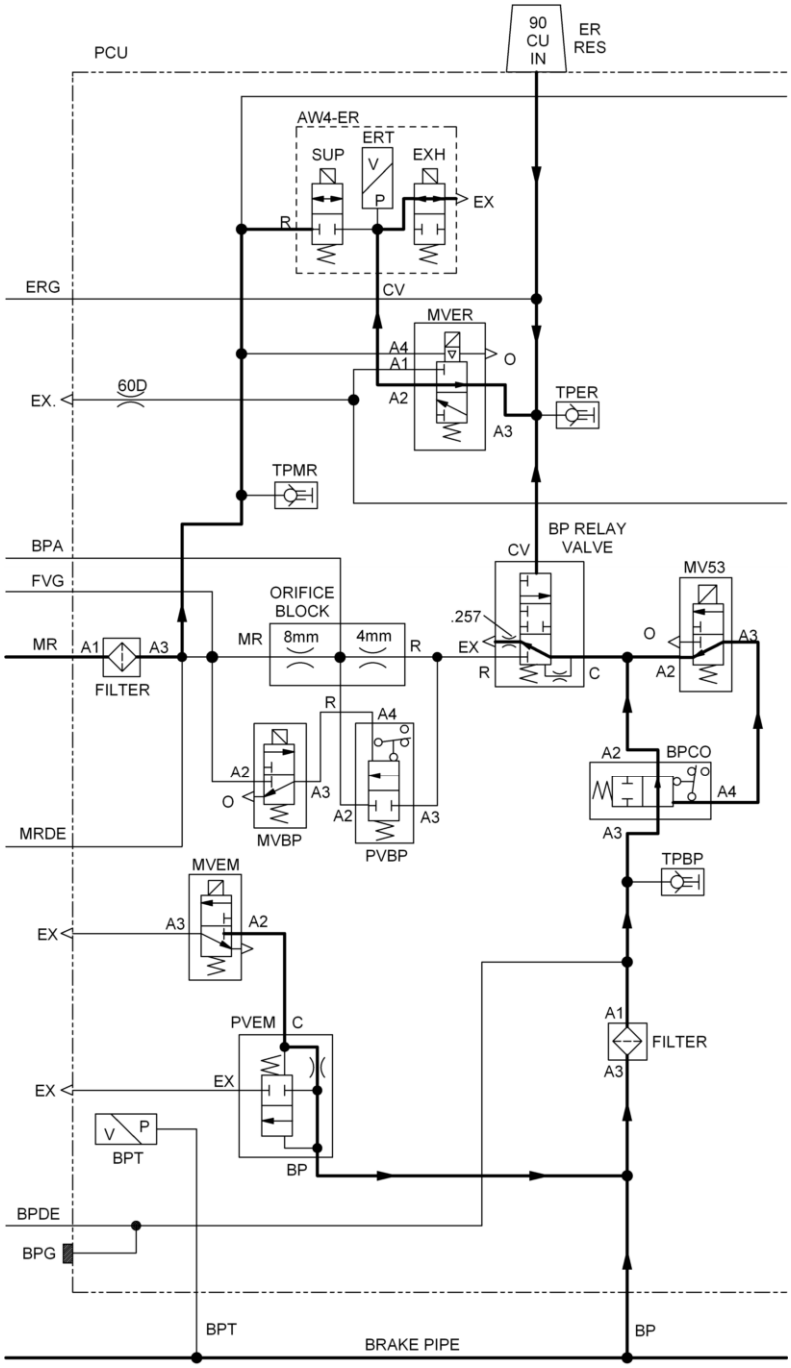

AW4-ER SUP. M.V.	-	DE-ENERGIZED
AW4-ER EXH. M.V.	-	ENERGIZED
MV53	-	DE-ENERGIZED
MVER	-	ENERGIZED

(#3)

FIGURE 1-19 ER/BP PNEUMATIC CONTROL CIRCUIT - LEAD-IN

RUNNING POSITION

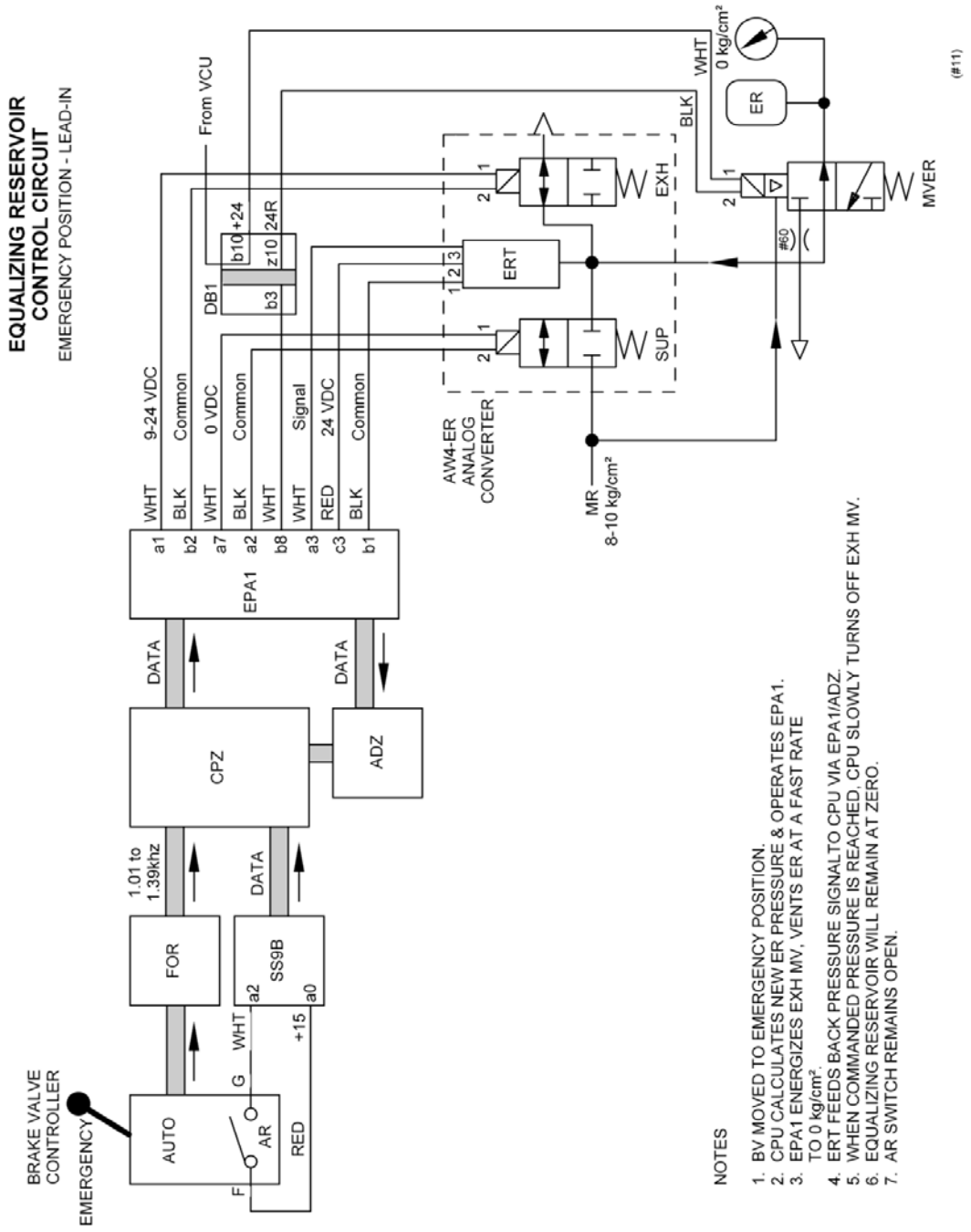

FIGURE 1-20 ER CONTROL CIRCUIT - EMERGENCY POSITION - LEAD-IN

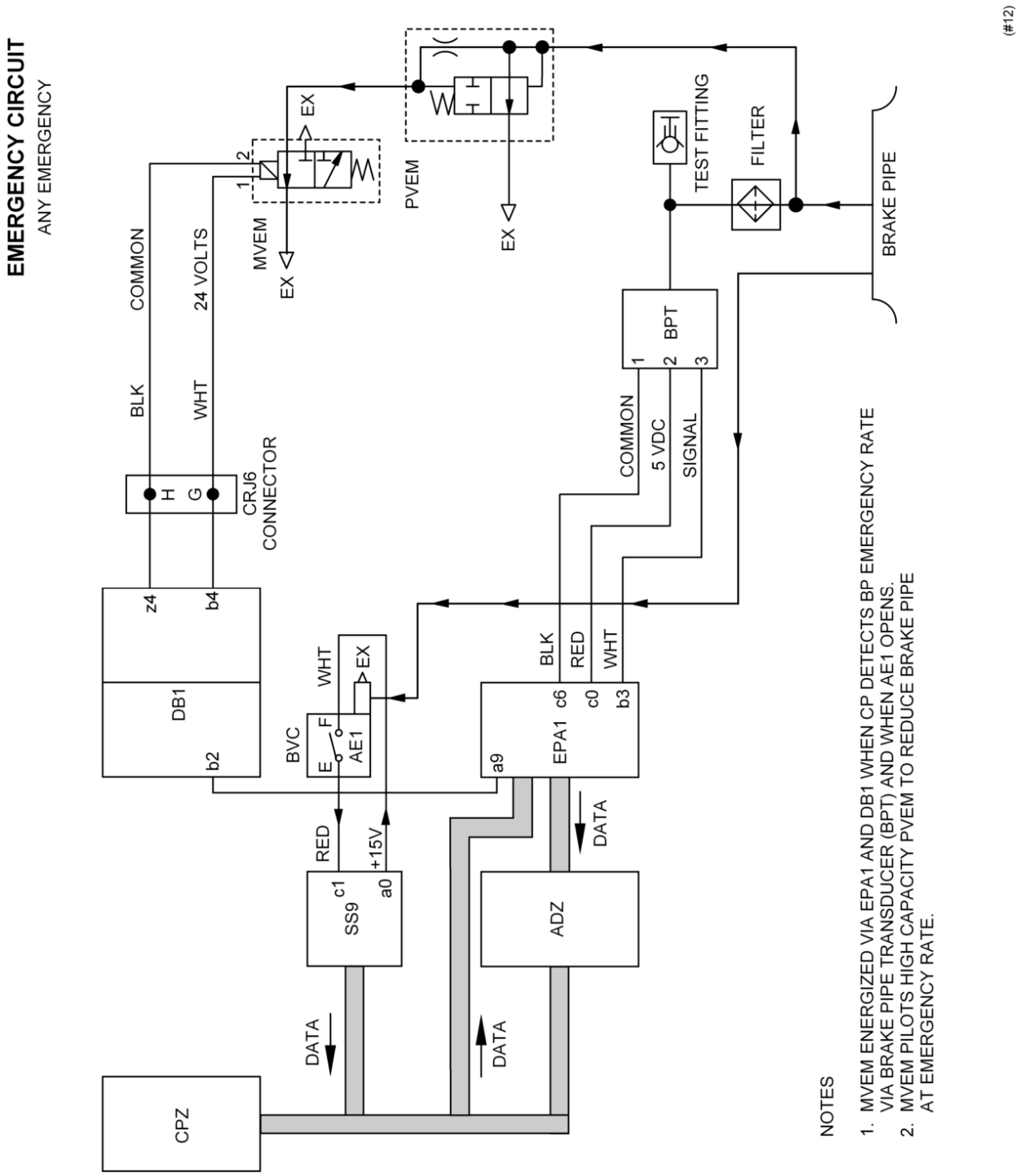

FIGURE 1-21 EMERGENCY CIRCUIT - ANY EMERGENCY

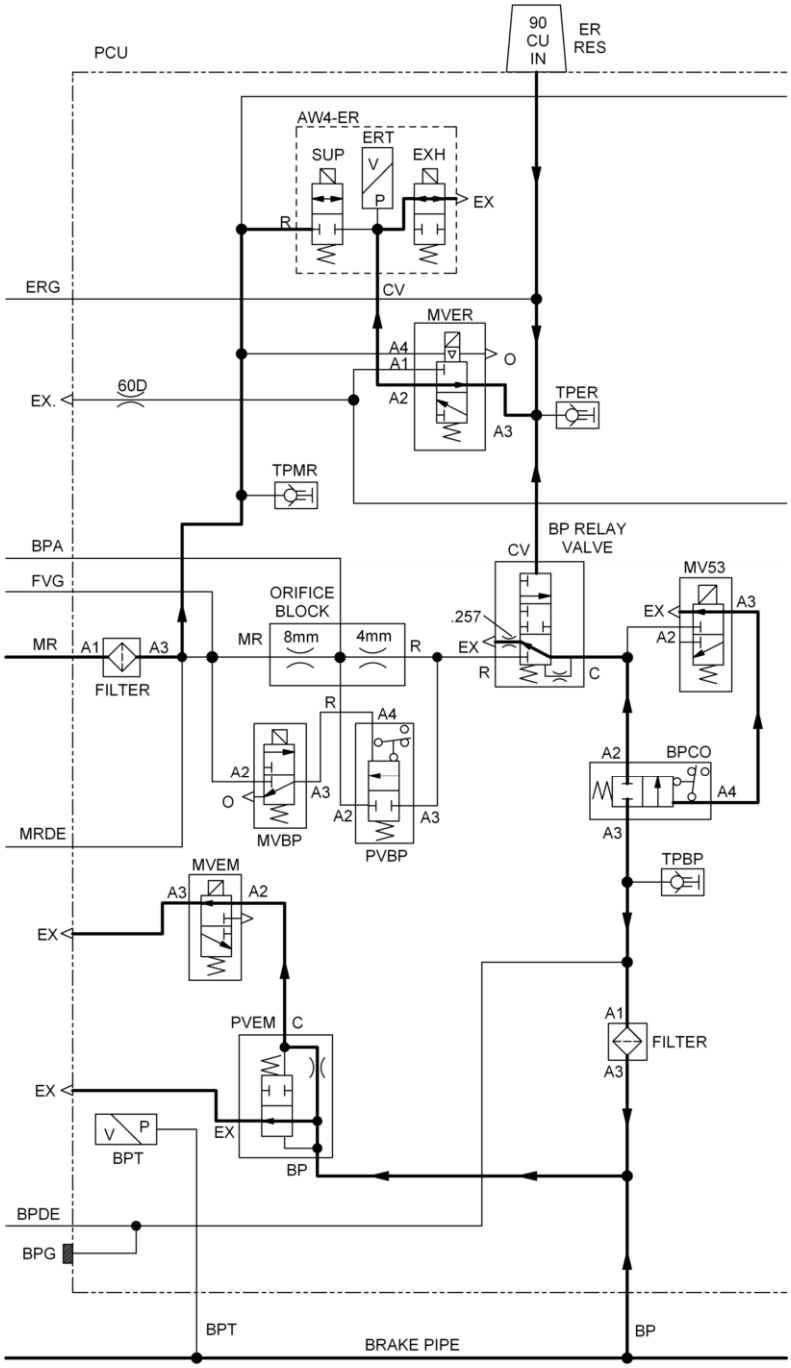

AW4-ER SUP. M.V.	-	DE-ENERGIZED
AW4-ER EXH. M.V.	-	ENERGIZED
MV53	-	ENERGIZED
MVER	-	ENERGIZED

(#4)

FIGURE 1-22 PNEUMATIC EMERGENCY CONTROL CIRCUIT - EQUALIZING RESERVOIR AND BRAKE PIPE

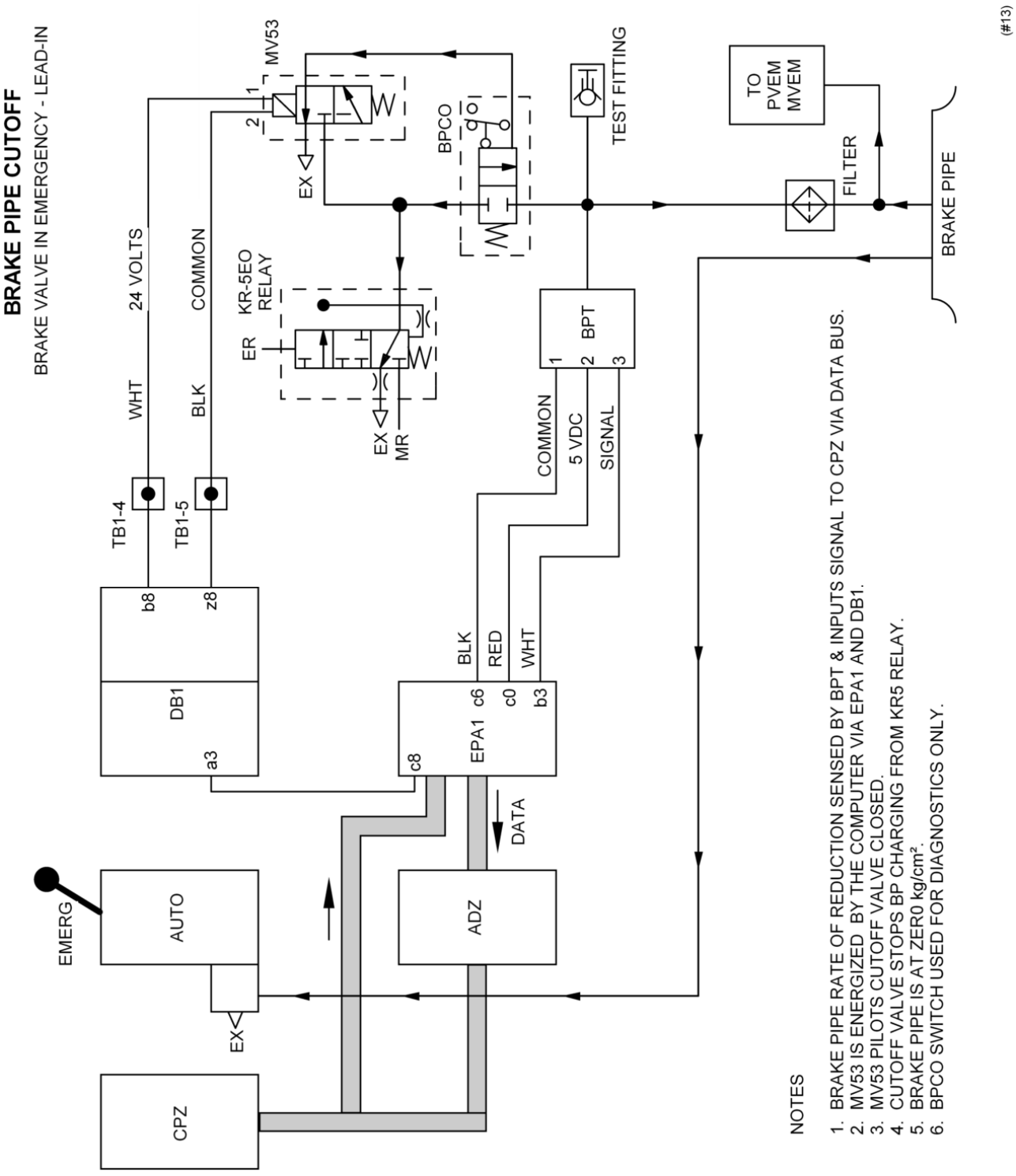

FIGURE 1-23 BRAKE PIPE CUTOFF - BRAKE VALVE IN EMERGENCY - LEAD-IN

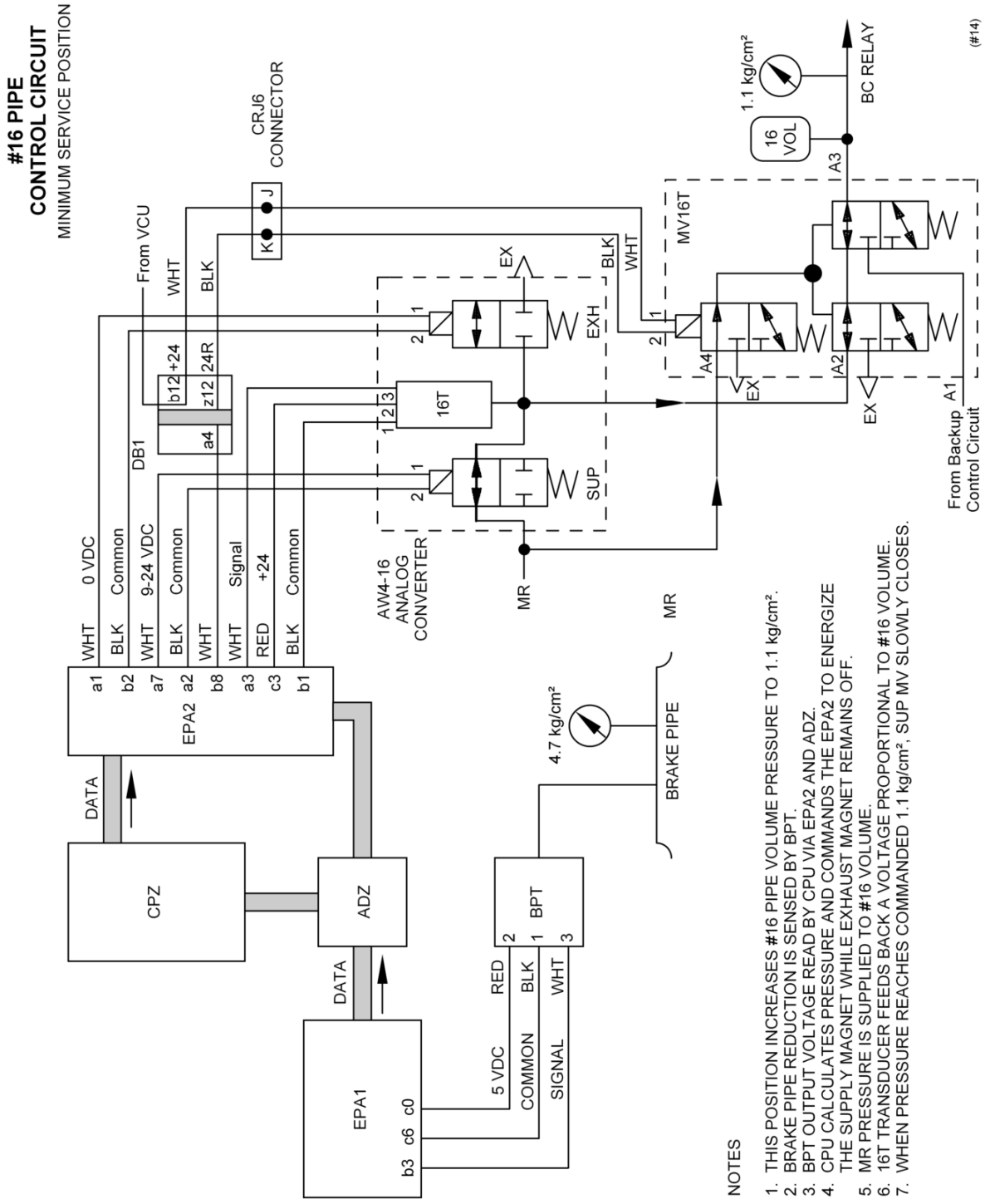

FIGURE 1-24 #16 PIPE CONTROL CIRCUIT - MINIMUM SERVICE POSITION

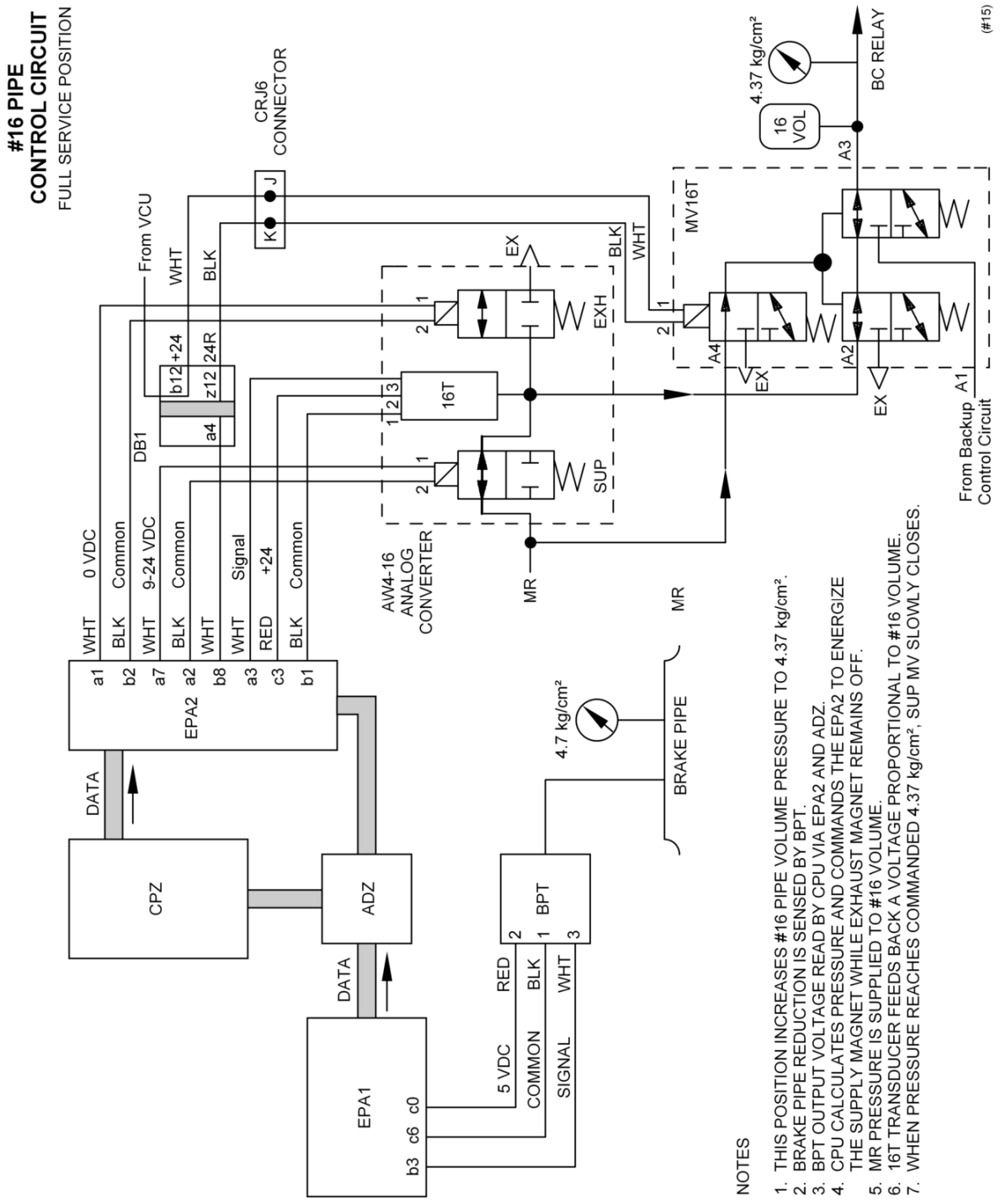

FIGURE 1-25 #16 PIPE CONTROL CIRCUIT - FULL SERVICE POSITION

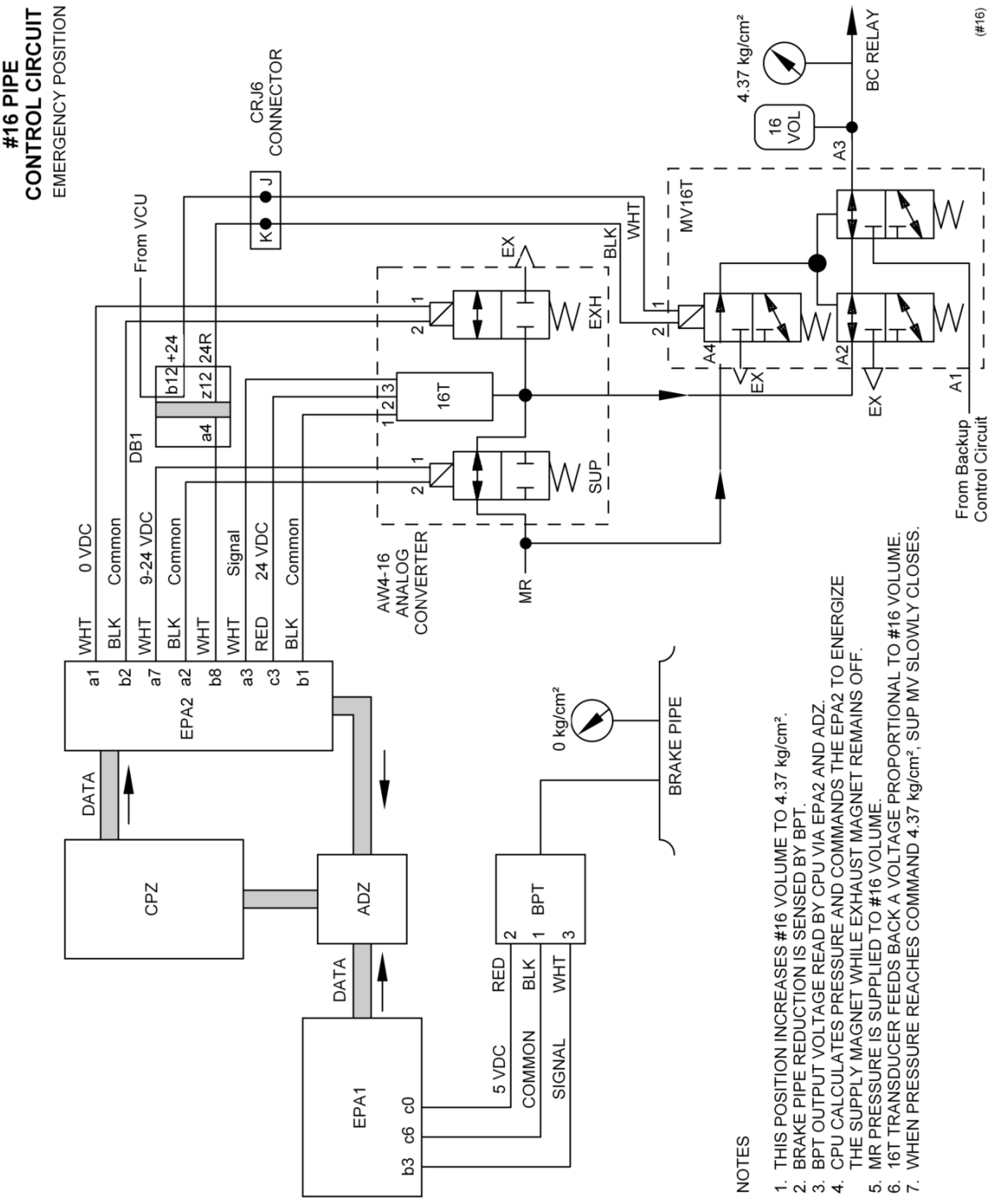

FIGURE 1-26 #16 PIPE CONTROL CIRCUIT - EMERGENCY POSITION

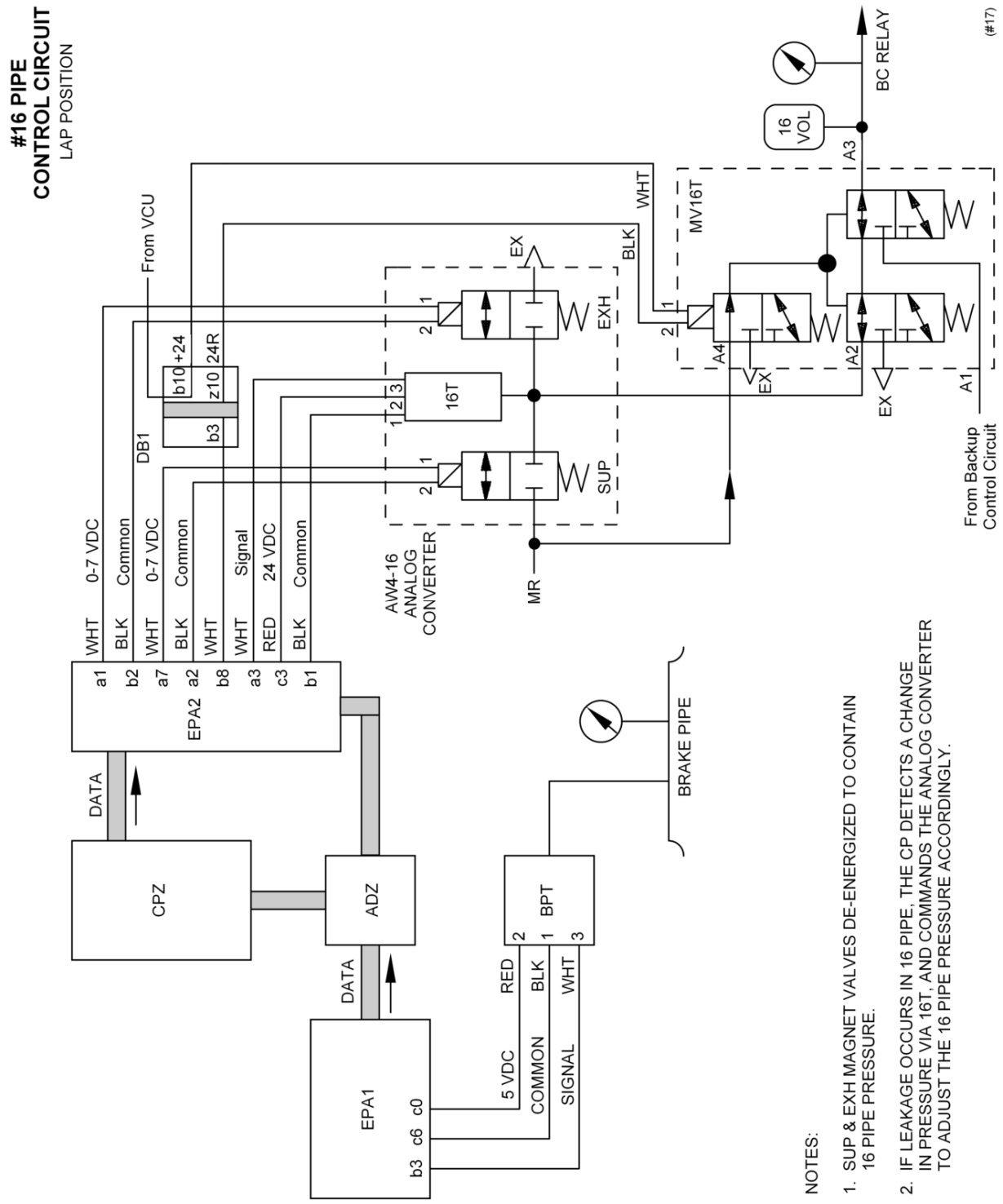

FIGURE 1-27 #16 PIPE CONTROL CIRCUIT - LAP POSITION

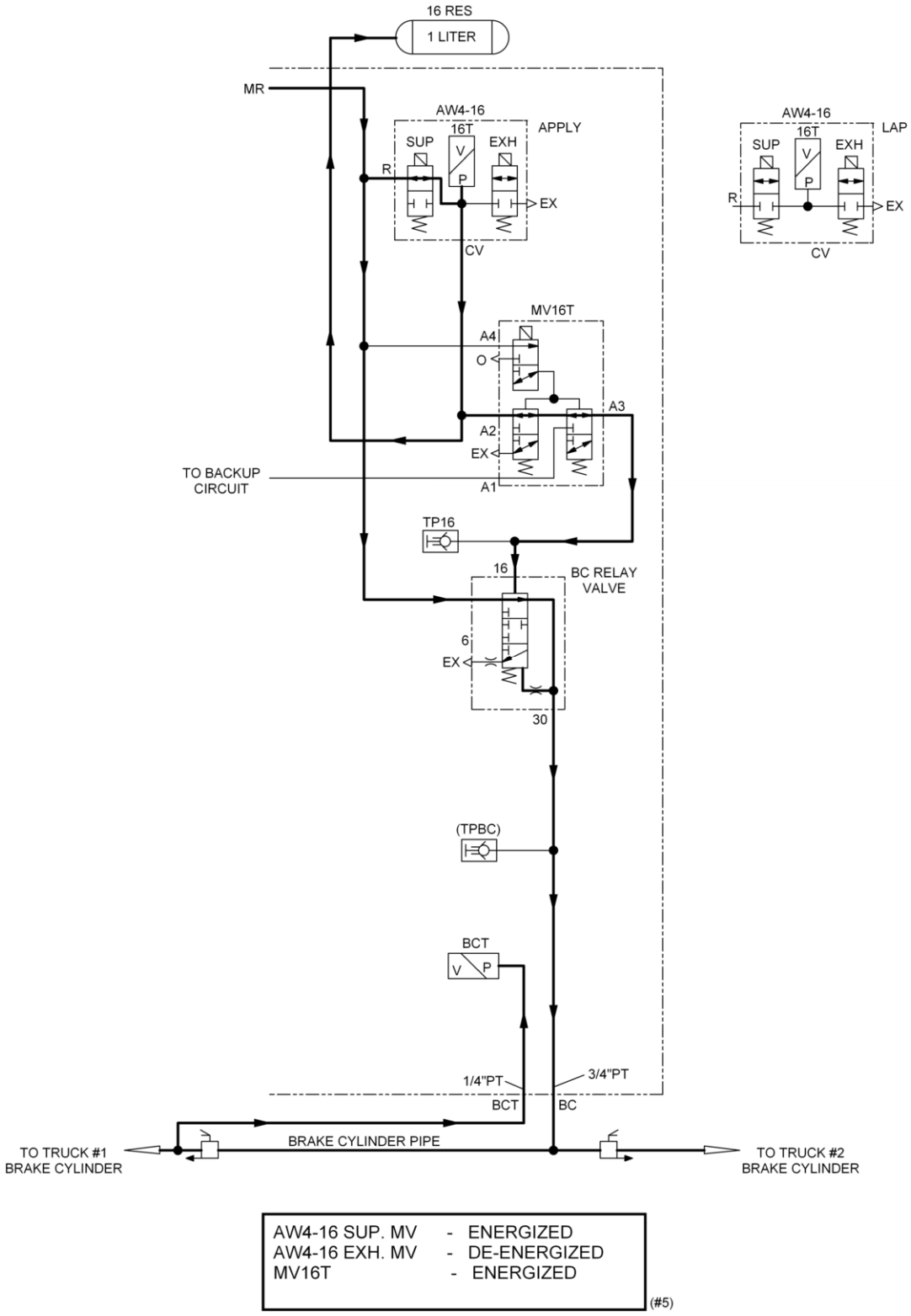

FIGURE 1-28 AUTOMATIC APPLICATION AND LAP - BRAKE CYLINDER CONTROL

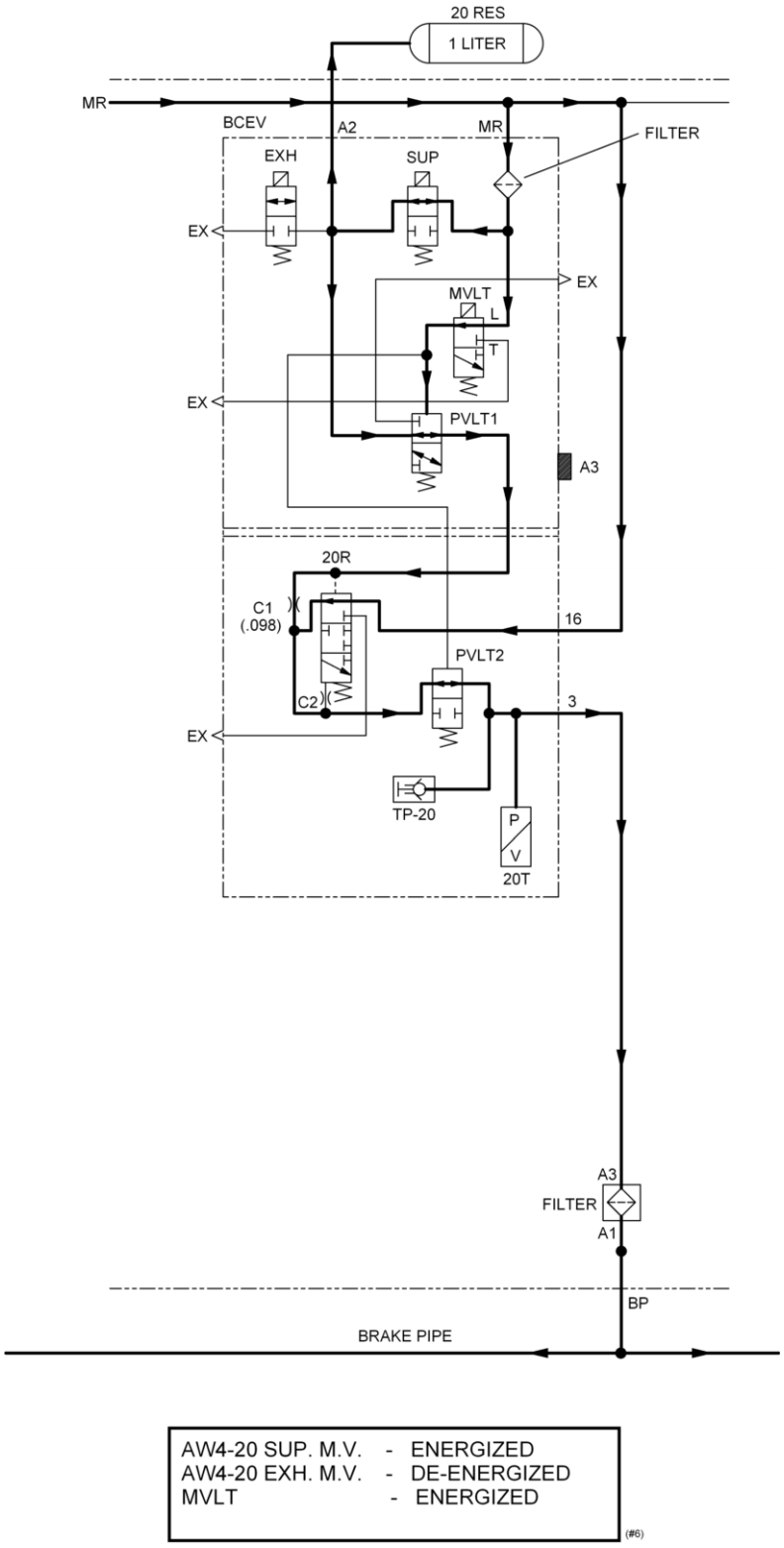

FIGURE 1-29 EMERGENCY APPLICATION - BRAKE CYLINDER CONTROL

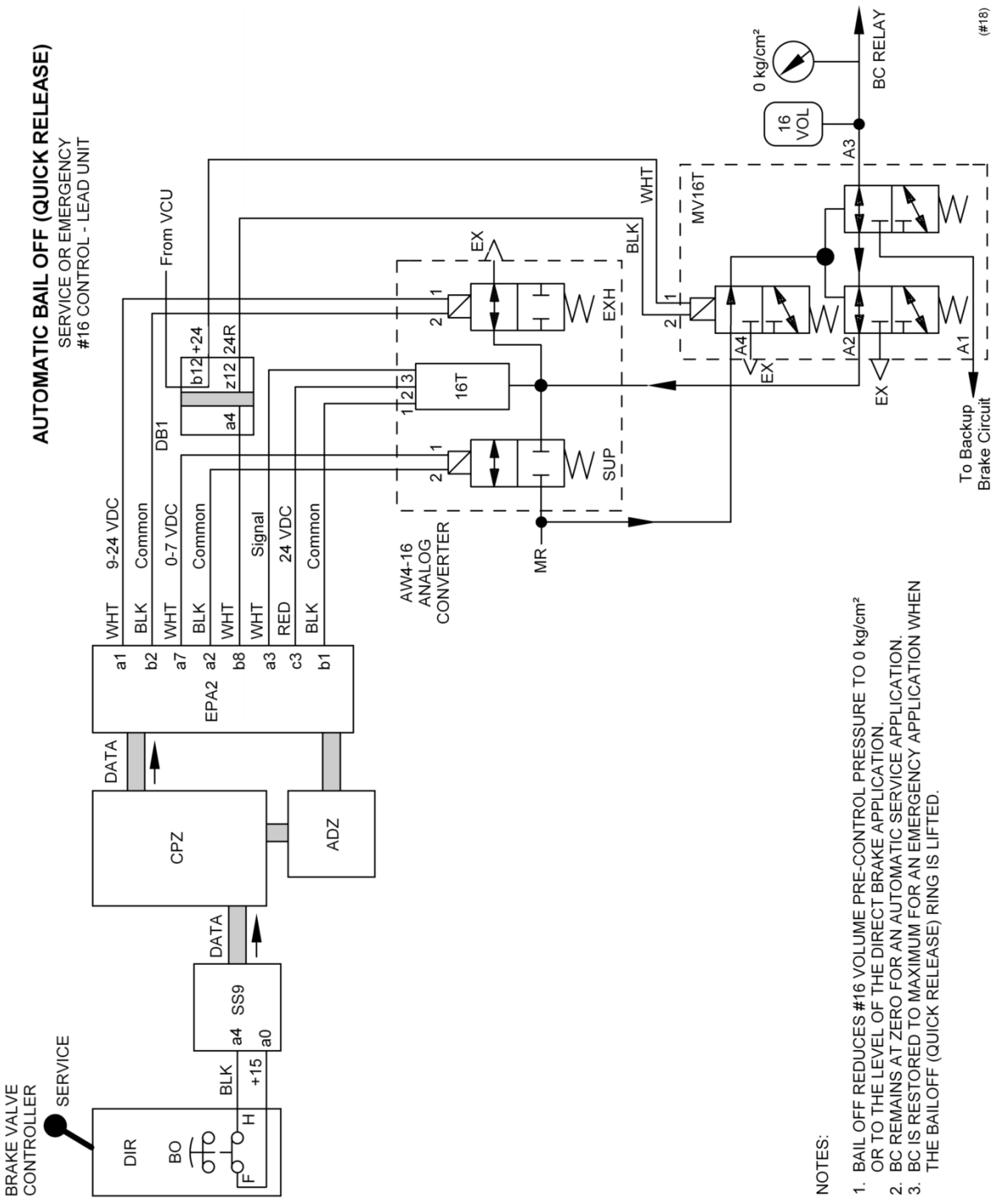

FIGURE 1-30 AUTOMATIC BAILOFF (QUICK RELEASE) - SERVICE OR EMERGENCY - # 16 CONTROL - LEAD UNIT

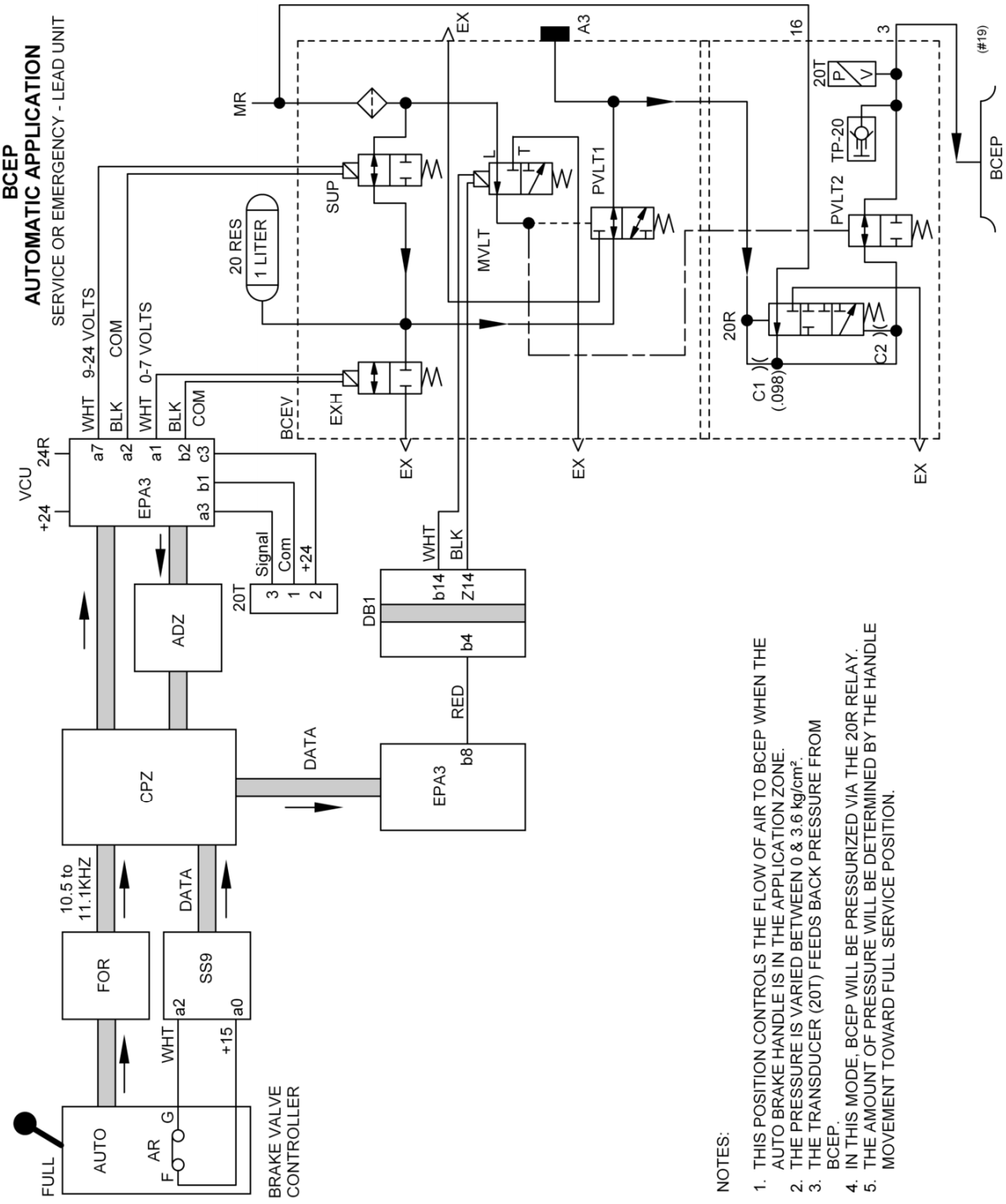

FIGURE 1-31 BCEP - AUTOMATIC APPLICATION - SERVICE OR EMERGENCY - LEAD UNIT

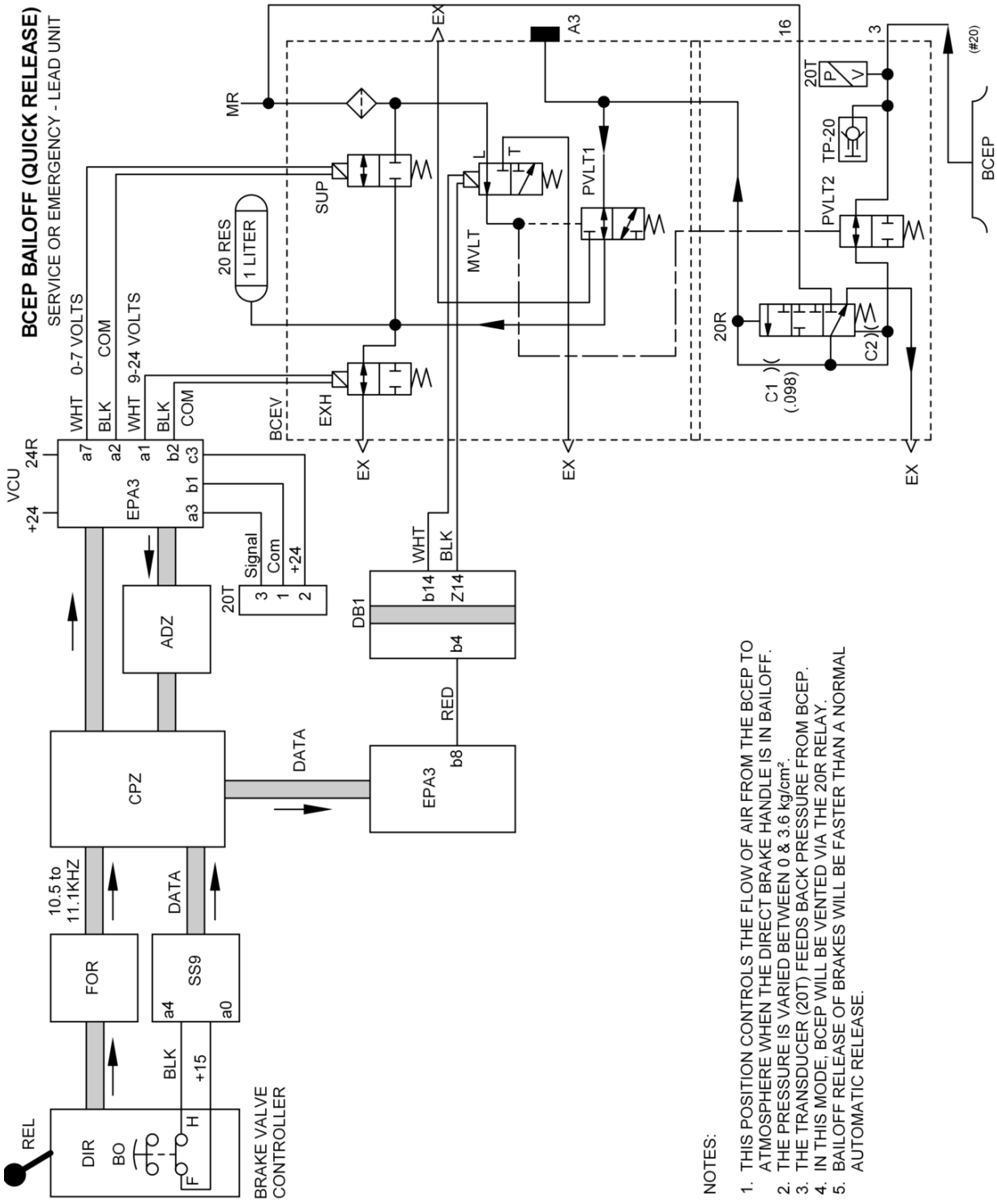

FIGURE 1-32 BCEP - BAILOFF (QUICK RELEASE) - SERVICE OR EMERGENCY - LEAD UNIT

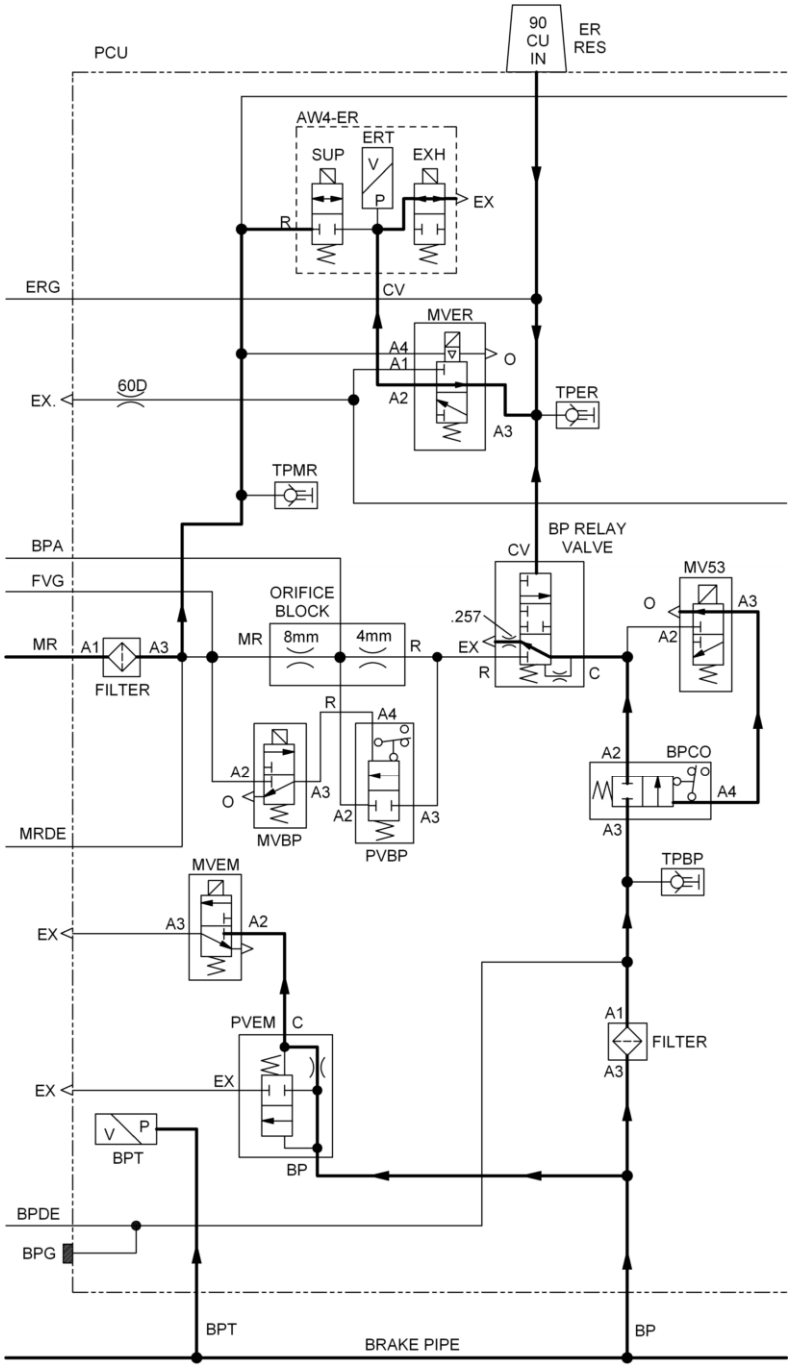

AW4-ER SUP. M.V.	-	DE-ENERGIZED
AW4-ER EXH. M.V.	-	ENERGIZED
MV53	-	ENERGIZED
MVER	-	ENERGIZED

(#7)

FIGURE 1-33 AUTOMATIC BRAKE - BRAKE RELEASE - TRAIL UNIT

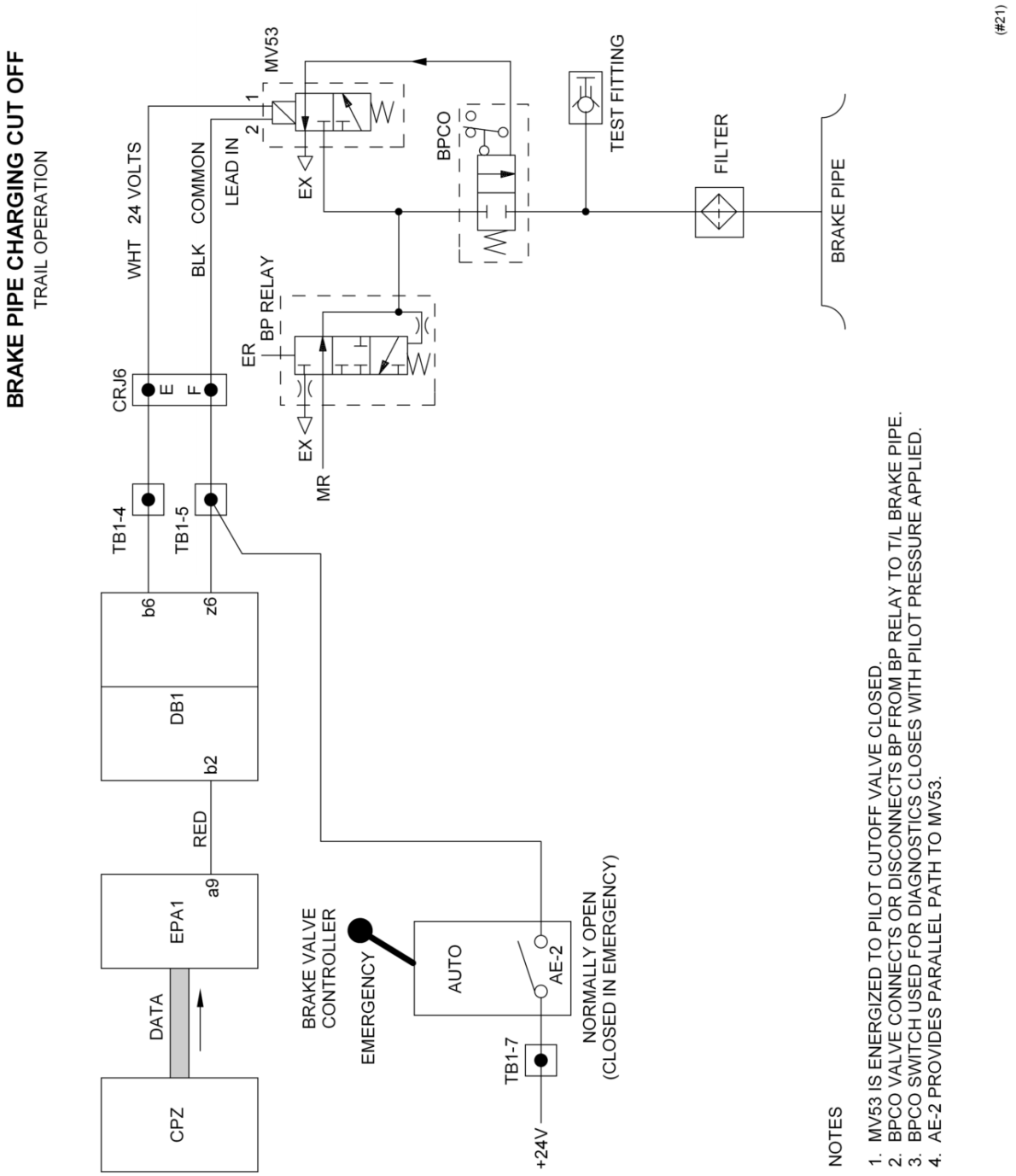

FIGURE 1-34 BRAKE PIPE CHARGING CUT OFF - TRAIL OPERATION

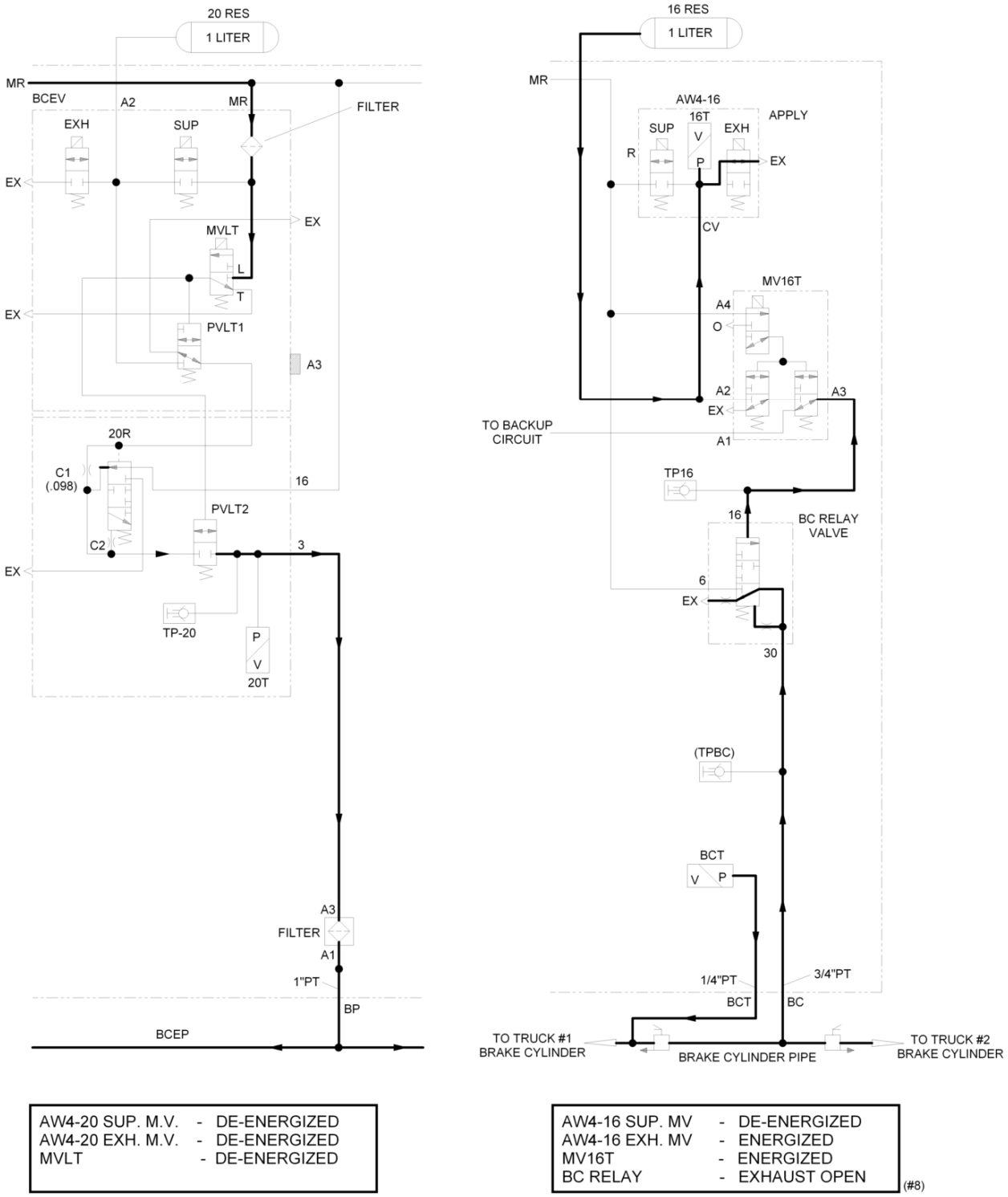

AW4-20 SUP. M.V.	-	DE-ENERGIZED
AW4-20 EXH. M.V.	-	DE-ENERGIZED
MVLT	-	DE-ENERGIZED

AW4-16 SUP. MV	-	DE-ENERGIZED
AW4-16 EXH. MV	-	ENERGIZED
MV16T	-	ENERGIZED
BC RELAY	-	EXHAUST OPEN

(#8)

FIGURE 1-35 AUTOMATIC BRAKE RELEASE - TRAIL POSITION

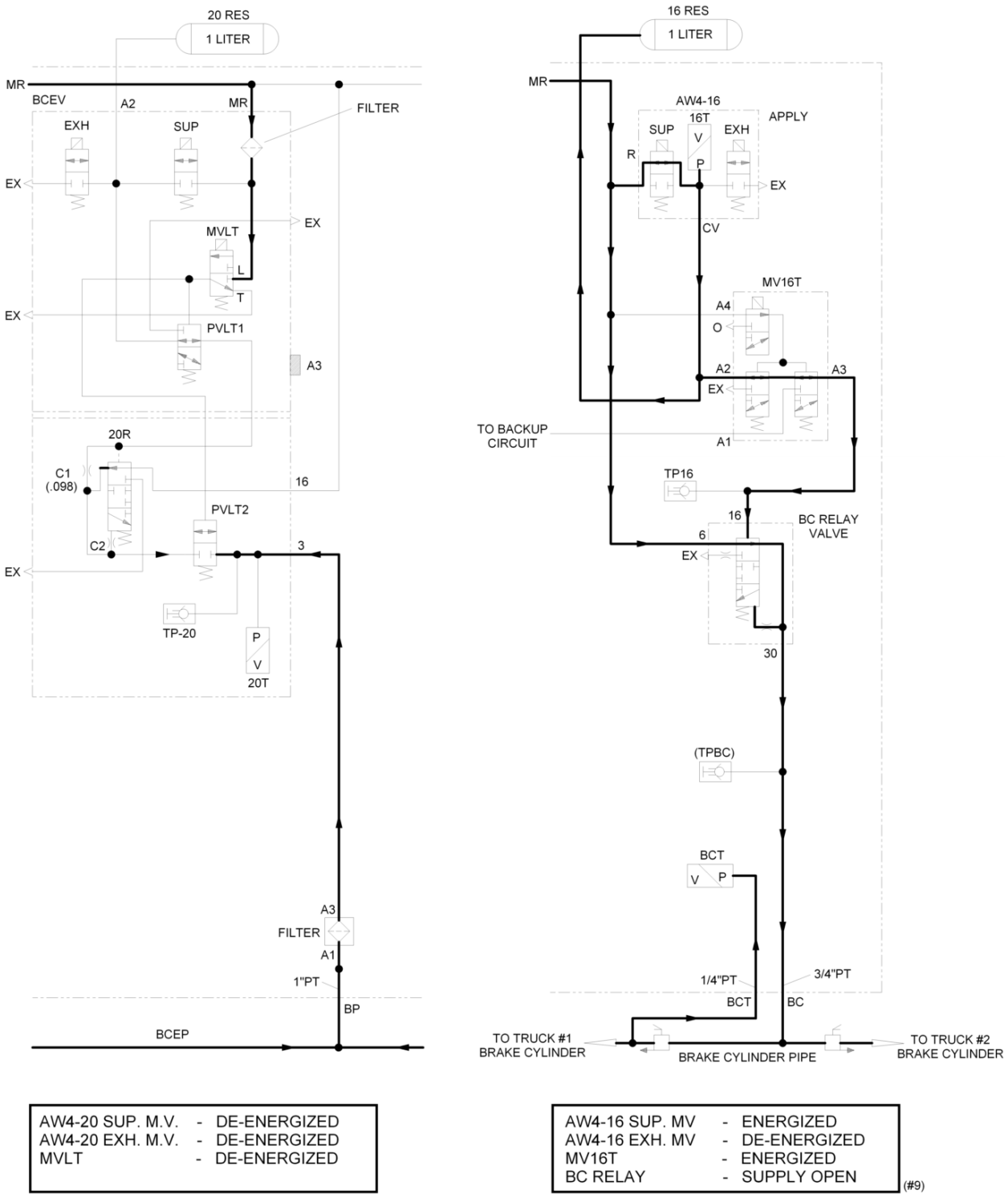

AW4-20 SUP. M.V.	-	DE-ENERGIZED
AW4-20 EXH. M.V.	-	DE-ENERGIZED
MVLT	-	DE-ENERGIZED

AW4-16 SUP. MV	-	ENERGIZED
AW4-16 EXH. MV	-	DE-ENERGIZED
MV16T	-	ENERGIZED
BC RELAY	-	SUPPLY OPEN

(#9)

FIGURE 1-36 AUTOMATIC APPLICATION - TRAIL POSITION

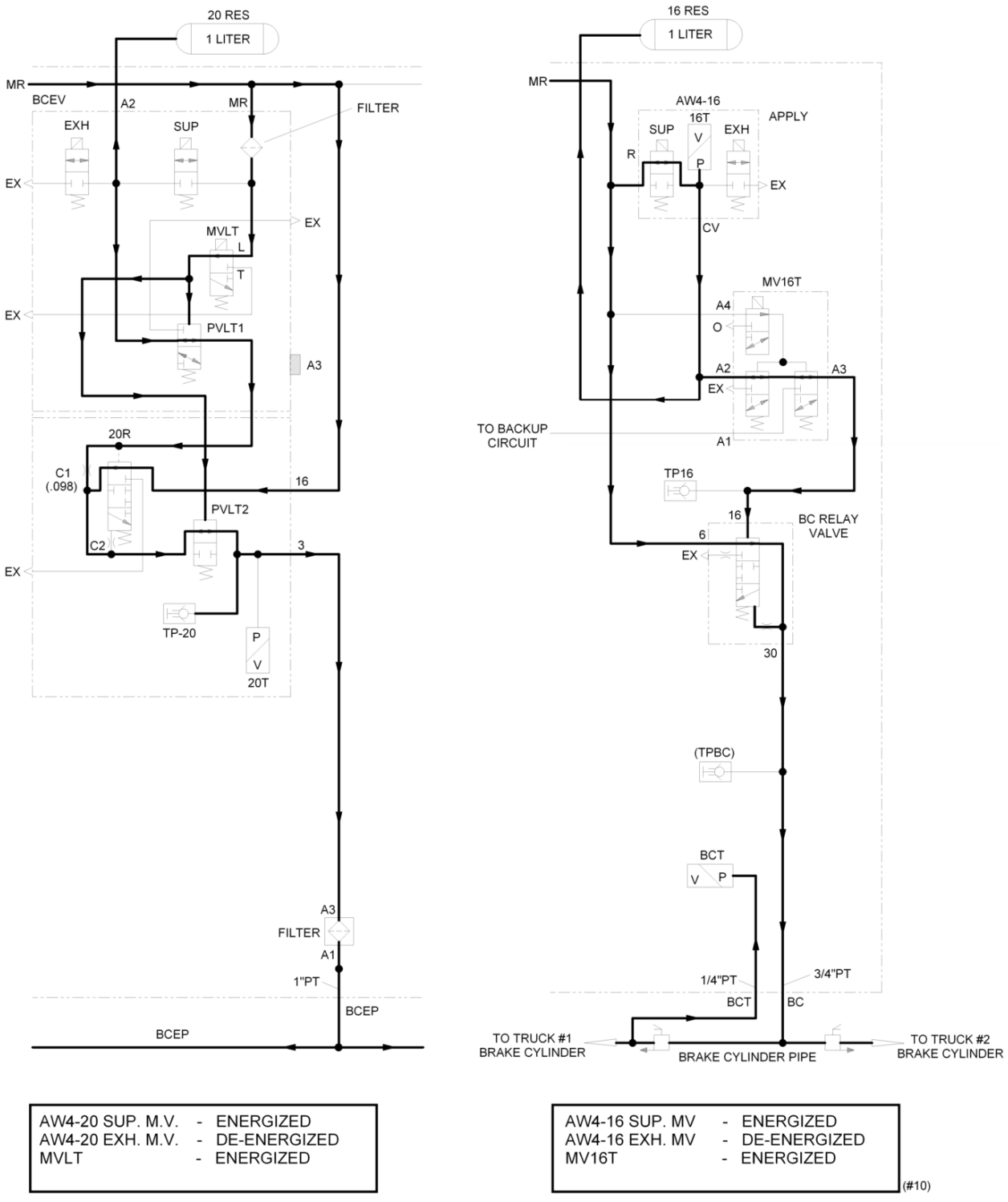

FIGURE 1-37 DIRECT BRAKE - BCEP APPLICATION - LEAD UNIT

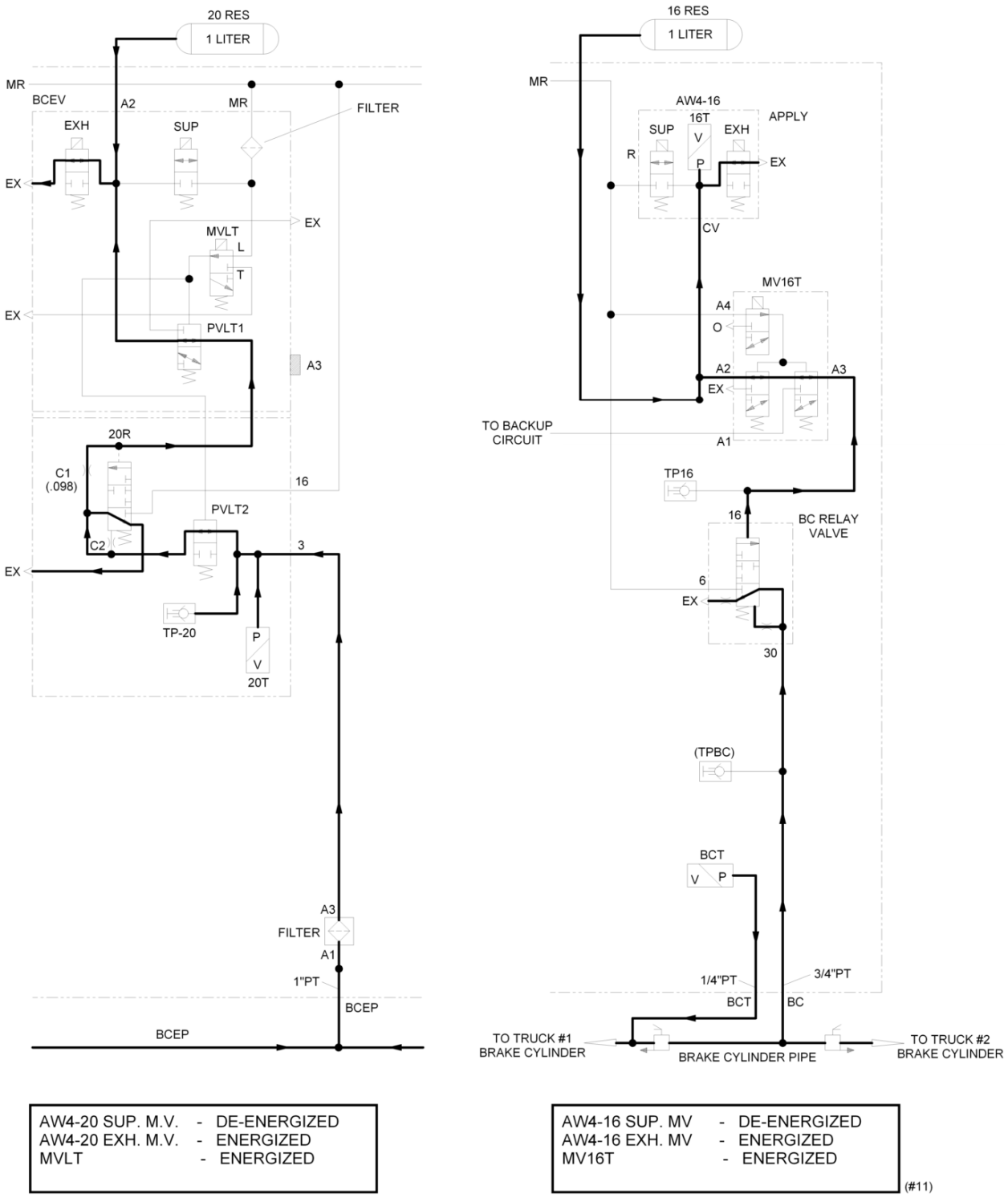

FIGURE 1-38 DIRECT BRAKE - BCEP RELEASE - LEAD UNIT

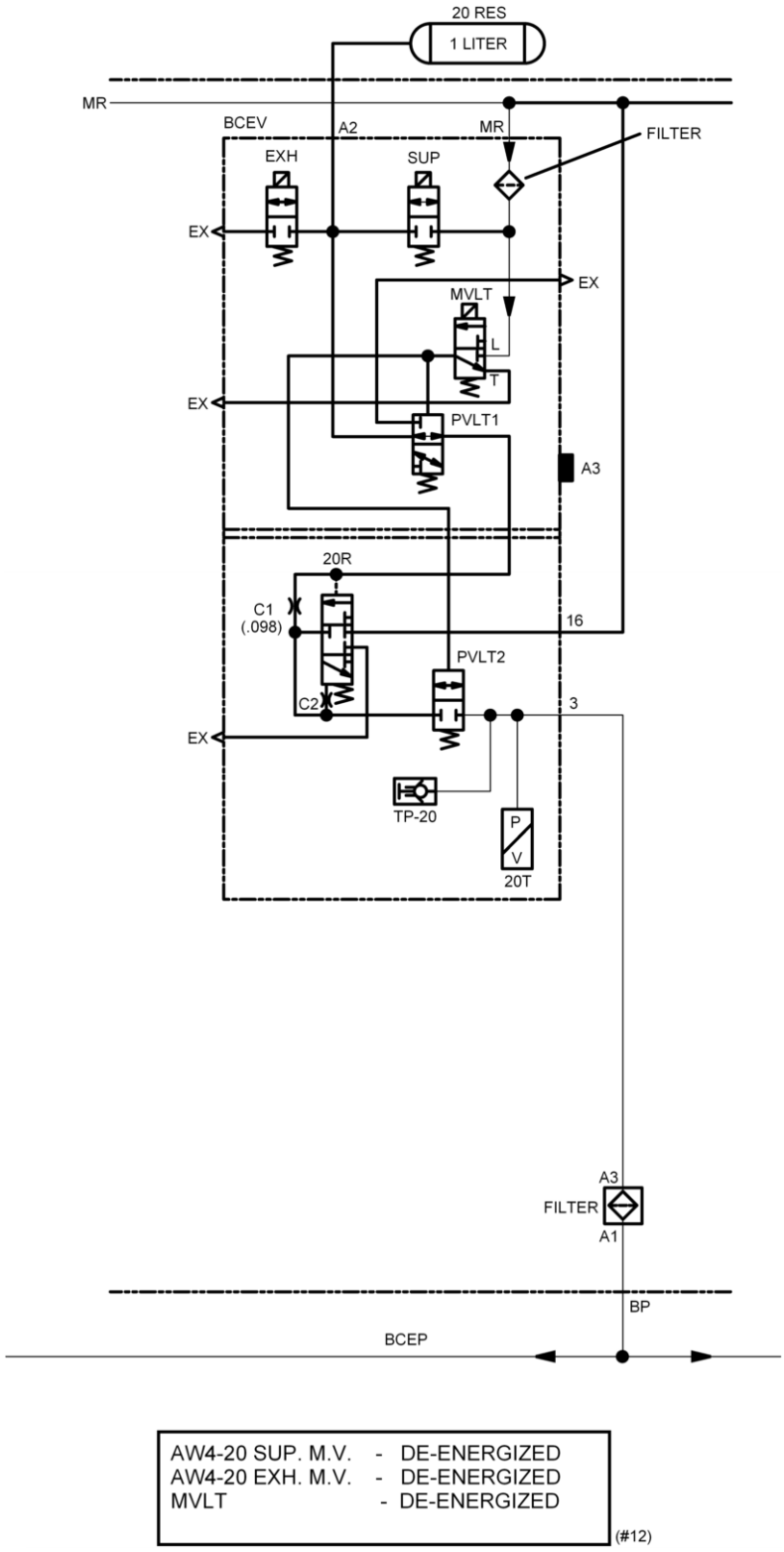

FIGURE 1-39 DIRECT BRAKE - TRAIL POSITION

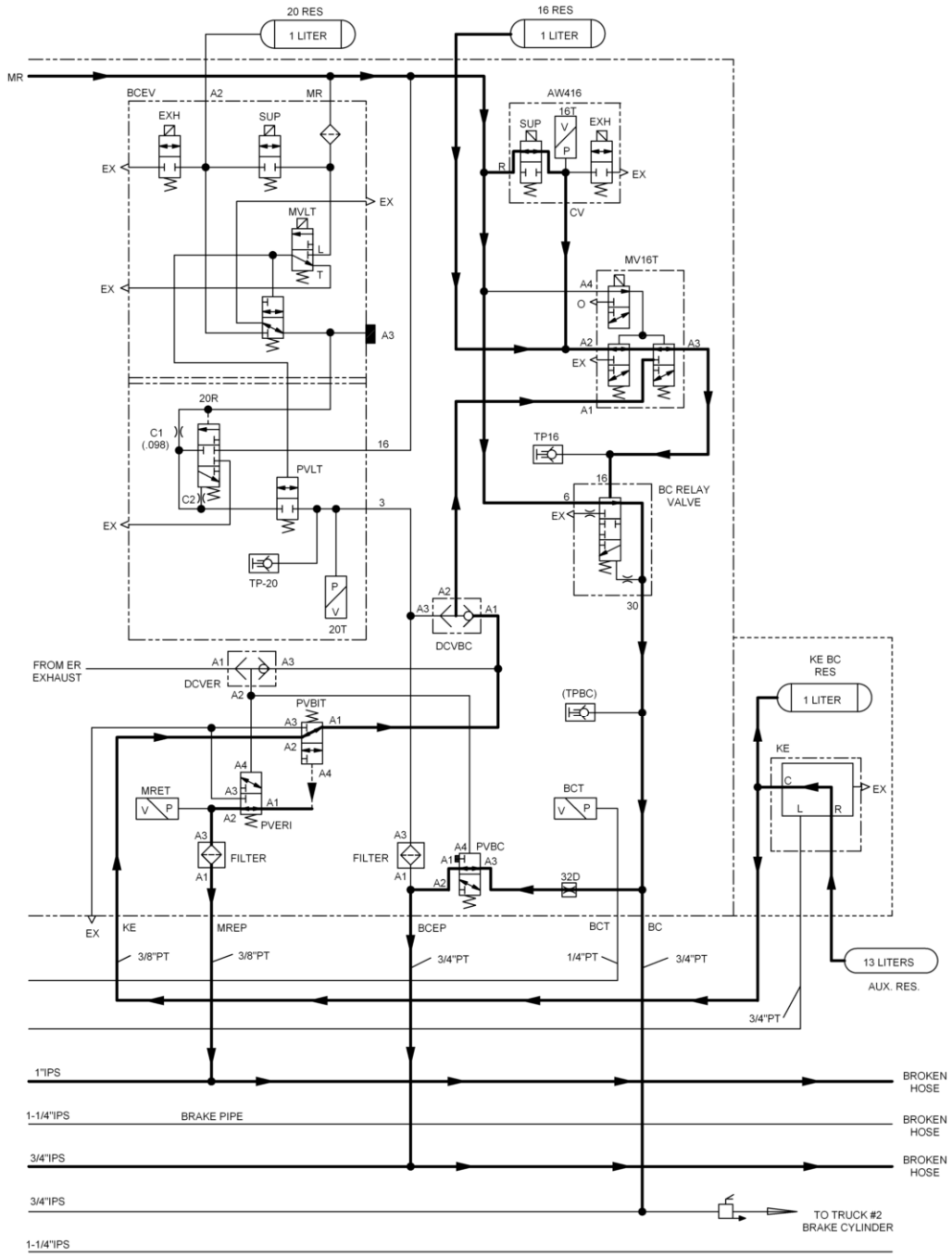

AW4-16 SUP. M.V.	-	ENERGIZED
AW4-16 EXH. M.V.	-	DE-ENERGIZED
MV16T	-	ENERGIZED

(#13)

FIGURE 1-40 LOCOMOTIVE CONSIST SEPARATION - LEAD UNIT

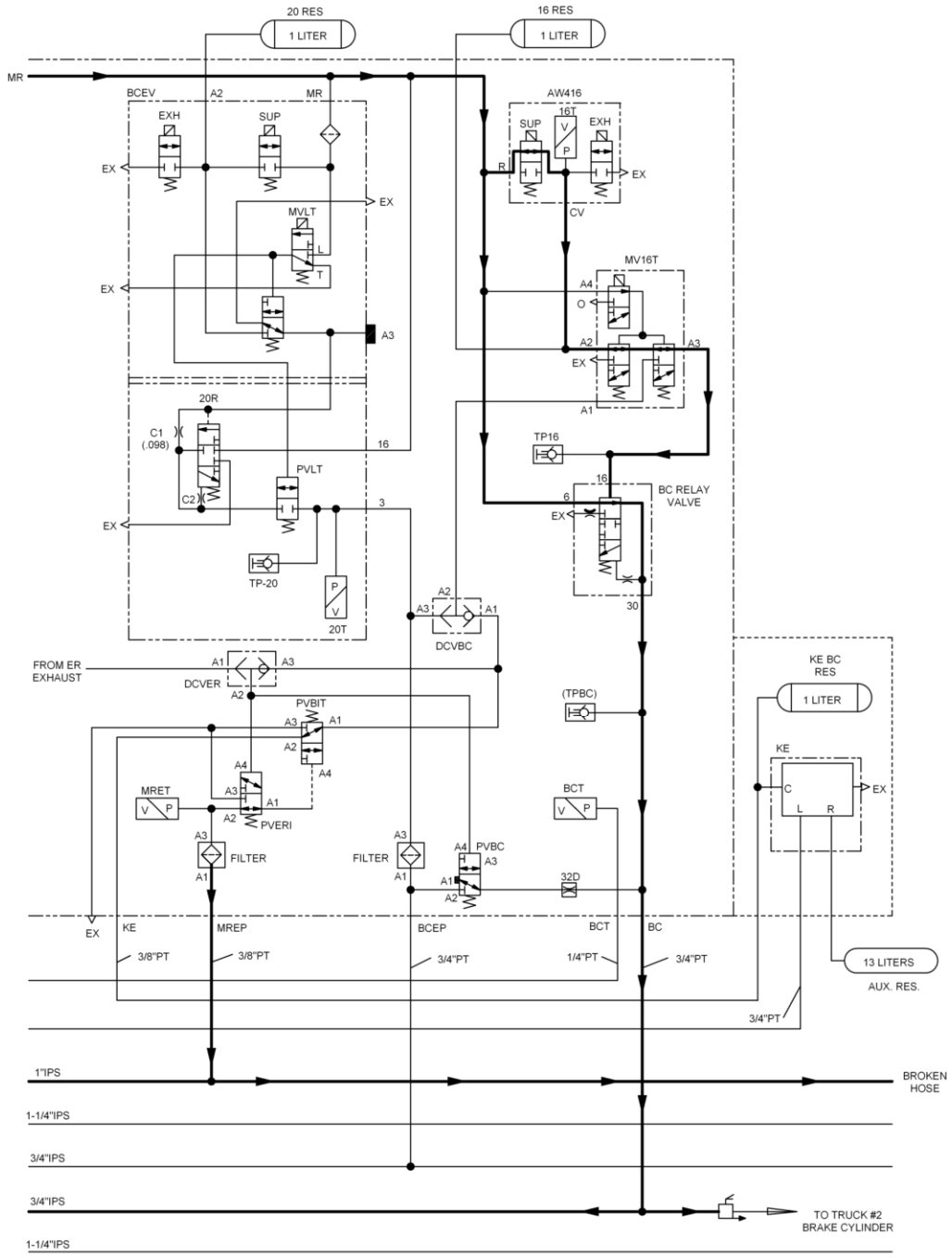

AW4-16 SUP. M.V.	-	ENERGIZED
AW4-16 EXH. M.V.	-	DE-ENERGIZED
MV16T	-	ENERGIZED
BC RELAY	-	ENERGIZED

(#14)

FIGURE 1-41 LOCOMOTIVE CONSIST SEPARATION - TRAIL UNIT

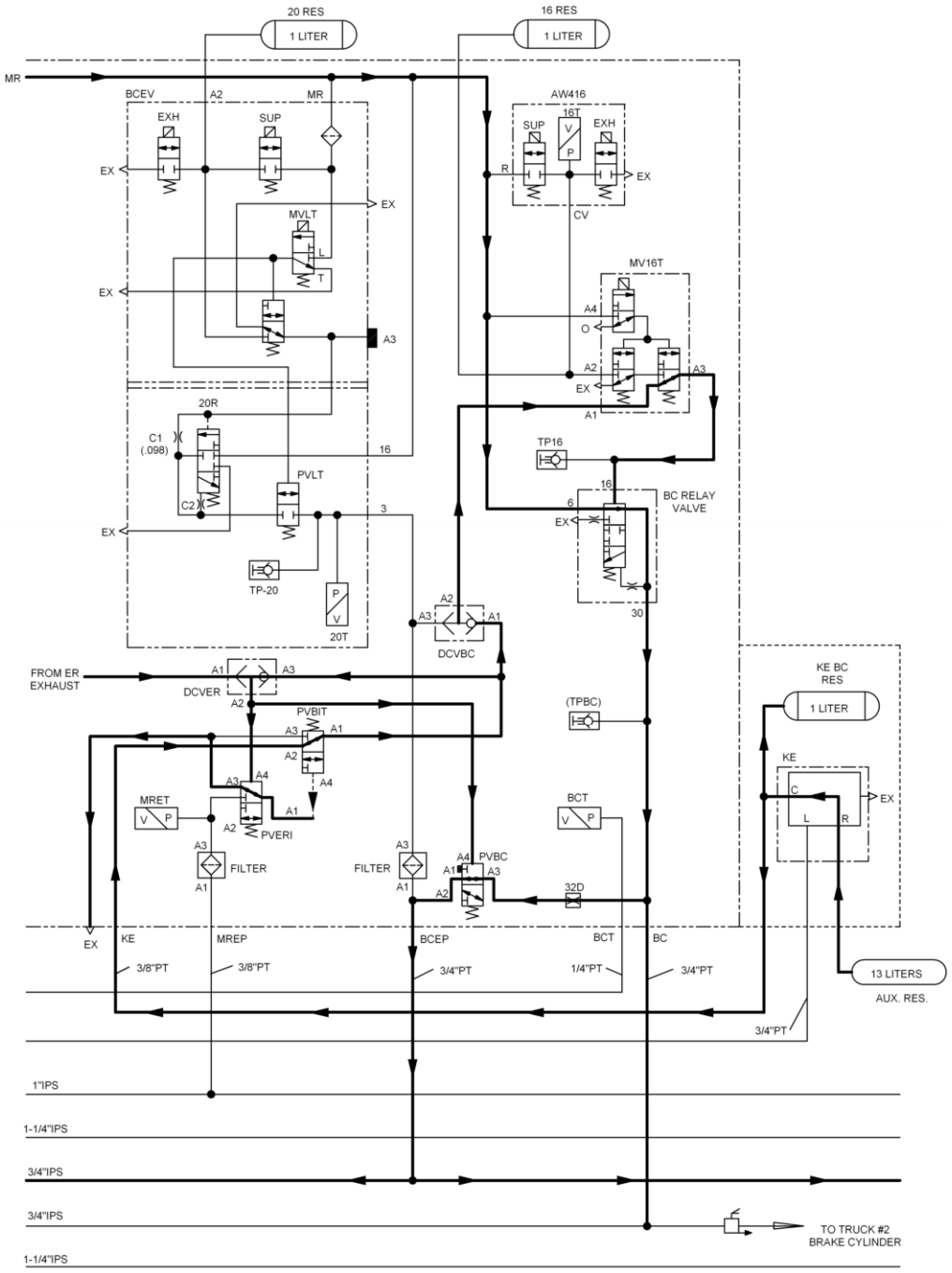

AW4-16 SUP. M.V.	-	DE-ERGIZED
AW4-16 EXH. M.V.	-	DE-ENERGIZED
MV16T	-	DE-ENERGIZED

(#15)

FIGURE 1-42 LOSS OF POWER BRAKE APPLICATION - LEAD UNIT

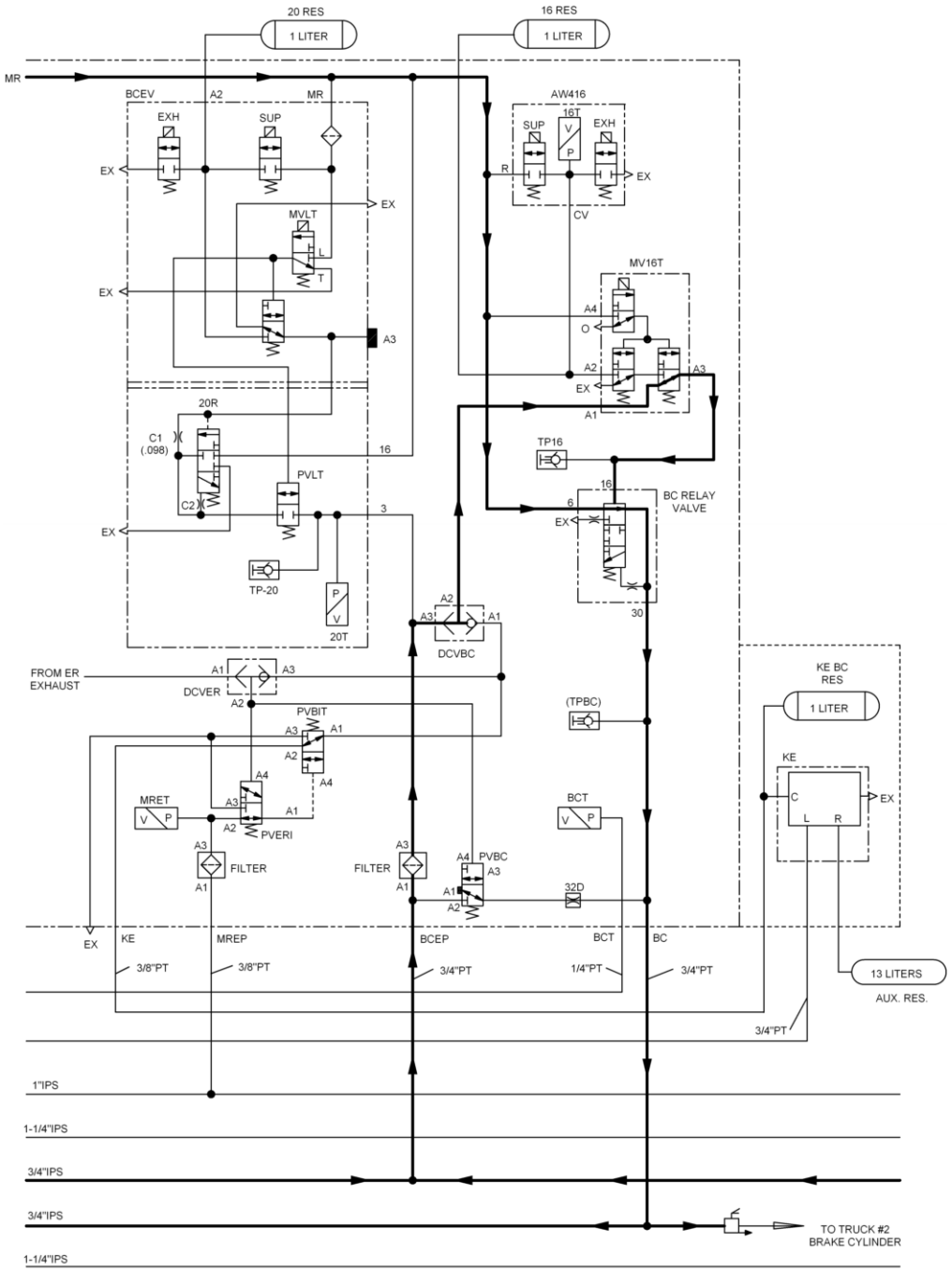

AW4-16 SUP. M.V.	-	DE-ERGIZED
AW4-16 EXH. M.V.	-	DE-ENERGIZED
MV16T	-	DE-ENERGIZED
BC RELAY	-	ENERGIZED

(#16)

FIGURE 1-43 LOSS OF POWER BRAKE APPLICATION - TRAIL UNIT

ISSUED BY	ENGINEERING	NUMBER (DISTR)
NORMAN CHRISTOPHERSEN	**TEST INSTRUCTIONS**	**0991**
APPROVED BY	ELECTRO-MOTIVE DIVISION General Motors Corporation LaGrange, Illinois	FIRST ISSUED
R. E. SPENK		**12 AUGUST 1999**
		SUPERSEDES

SUBJECT	INDIAN RAILWAYS CCB AIR BRAKE SYSTEM ETI
AFFECTS MODELS	GT46MAC
PART NOS AFFECTED	
REF. DRAWINGS	ETI 456, AI 2484

NOTE:

The Multiple Unit Test can be done either with using the Test Cart Method or using the Two Locomotive Method. It does not have to be done both ways.

REV	DATE	RFC	PAGES AFFECTED	CHANGED BY	APPROVED BY

PURPOSE:

This test instruction is to provide a test code for the microprocessor controlled brake system as applied to the GT46MAC locomotive.

SCOPE:

This procedure is issued to provide a test code for the Knorr CCB brake system which has the following features:

I. EM2000 serial interface

NOTES:

I. Since the brake equipment is electronically controlled, battery power is required. It may be desirable to conduct all testing with the locomotive running. Follow shop rules regarding running locomotives.

II. A minimum main reservoir pressure of 120 psi is required for the test procedure.

III. Loss of main power to the CCB brake system will cause the alarm bell to sound.

IV. The CCB system is equipped with a pneumatic back up that operates in parallel to the microprocessor control and is always in operation. Upon system power up, there are certain conditions that must be satisfied before the microprocessor system gains control of the brake system. Until that time, the locomotive brakes are under control of the pneumatic back up system.

V. If the CCB system set up is for LEAD-IN on power up, the computer will not take control of the brake system until the automatic brake handle is moved to the FULL SERVICE position for a minimum of 10 seconds and returned to the RUNNING position and brake cylinder pressure is zero psi. If the Automatic brake valve handle had previously been placed in Emergency position, then the handle must remain in the emergency position for 60 seconds.

VI. If the CCB system is set up is for TRAIL or LEAD-OUT on power up, the computer will not take control of the brake system until brake cylinder pressure is zero psi.

EQUIPMENT:

The system includes the following main components:

I. Brake Valve Controller - There are two brake valve controllers in the cab. The brake valve controller includes one automatic and one independent brake control handle. The brake valve controllers are the operator interface to the brake system.

II. Brake Bay Equipment Rack which Includes:

A. Computer Relay Unit (CRU) - The computer relay unit contains the brake control computer used for control of the brake system. It also contains the input interface circuit boards and output relays for interface with the locomotive control system.

B. Pneumatic Control Unit (PCU) - The pneumatic control unit includes the equipment required to operate the pneumatic system. The pneumatic control unit is the interface to the locomotive air system.

C. Voltage Conditioning Unit (VCU) - The voltage conditioning unit is the main power supply for the CCB system. The VCU reduces the 73.5 volts DC to a filtered 24 volts DC to the CRU.

D. Dead In Tow (KE) Valve - The KE valve provides pneumatic back up functions to allow basic air brake functions in the event of failure of the microprocessor control. When the locomotive is in back up mode using the KE valve, operation of the locomotive is possible only in the trail mode.

III. EM2000 System Interface - The EM 2000 interface is provided for all air brake I/O's except the PCR. Blending will be provided on future Passenger locomotives.

PRECAUTIONS:

Due to the characteristics of the brake equipment, the following precautions must be observed:

I. All cables and input wires to the CRU, CPU and VCU must be connected at all times while the equipment is on.

II. All cables and input wires to the CRU, CPU and VCU must be disconnected during all meggaring, hi-potting and welding.

III. Since the brakes will periodically be released during the test, the wheels must be blocked.

SERIAL NUMBERS:

Record the following serial numbers:

Brake Controller #1 (CPU)	773.5902	_____
Brake Controller #2 (CPU)	773.5902	_____
Brake Bay Equipment Rack	775002	_____
Computer Relay Unit	773.5949	_____
Voltage Control Unit	775145	_____

STAMP EACH PARAGRAPH UPON COMPLETION

I. TEST PREPARATION:

A. Check that all piping and wiring is complete and all unused wires are tied back. _____

B. Apply a brake cylinder pressure test gauge at the BC pressure tap fitting on the Pneumatic Control Unit. Use this gauge for BC timing, and during CCB and EM2000 loss of power tests as noted. _____

C. Apply an equalizing reservoir pressure test gauge at the ER pressure tap on the Pneumatic Control Unit. Use this gauge for ER timing, and during CCB and EM2000 loss of power tests as noted. _____

D. Apply a brake pipe pressure test gauge at the BP pressure tap fitting on the Pneumatic Control Unit. Use this gauge for BP as noted during CCB and EM2000 loss of power tests. _____

E. Apply a Brake Cylinder Equalizing pipe test point at the 20 pipe test point. _____

F. Close the Dead Engine cut out cock. _____

G. Block the locomotive wheels and apply the parking brake. _____

H. Close MR filter drain valves. _____

I. Close manual MR drain valves. _____

J. If the engine will not be running during testing, connect the unit to a clean and dry air supply that is a minimum of 8.3 kg/cm^2 and is capable of meeting the air demands of the air system. _____

K. Close all unused end connection cut out cocks. _____

L. Close the emergency brake valves. _____

M. Open the #2 main reservoir cut out cock, auxiliary main reservoir cut out cock and brake cylinder cut out cocks. Cut in all auxiliaries, bell, sanders, etc. _____

N. Check the air compressor control settings using a test gauge at the main reservoir test fitting provided on the equipment rack. _____

Since the EM2000 system is required for brake system functions, the EM2000 system must be qualified prior to qualification of the locomotive brake system. _____

II. SYSTEM POWER UP AND SET UP:

A. Pass/Goods switch must be set to GOODS position. _____

B. Move the automatic handle to the FULL SERVICE position and leave there for 40 seconds to reset system. _____

C. Place the independent handle in the RELEASE position. _____

D. Close the battery knife switch, EM2000 control circuit breaker, local control circuit breaker, control circuit breaker, control and fuel pump switch, and the computer control breaker. _____

E. If the engine will be running during the test, close all circuit breakers and switches so required. _____

F. Set the brake system to LEAD-IN via the Lead-Trail switch on the console. _____

G. Note that after the EM2000 system is running and has been initialized, close the air brake circuit breaker. The current air brake pressures and brake system status will be displayed on the cab pressure gauges. _____

H. Place the automatic handle to the RUNNING position and allow system to fully charge for three minutes. Note that the equalizing reservoir is 5.2 ± 0.07 kg/cm^2 (73.5 ± 1 psi) and that brake pipe is within 0.07 kg/cm^2 (1 psi) of equalizing gauge display. Note that brake cylinder pressure reduces to zero. _____

NOTE: If brake pipe fails to charge, place the automatic handle into the FULL SERVICE position for a minimum of 10 seconds. Return the automatic handle to the RUNNING position and note brake pipe charges to within 0.07 kg/cm^2 of equalizing reservoir gauge display.

I. Check all gauges for accuracy to within 0.07 kg/cm^2. _____

III. MAIN RESERVOIR AND RELATED PIPING LEAKAGE TEST:

A. If the locomotive is running during main reservoir leakage test, the manual override on the air compressor magnet valve must be used to keep the air compressor unloaded during the main reservoir leakage test. Condition both automatic MR drain valves not to function during the main reservoir leakage test. _____

B. Check main reservoir and related piping for leaks. Leakage must not exceed 0.07 kg/cm^2/min in a three minute test after main reservoir has been reduced to 40 psi below maximum pressure. When soaping for leakage, make certain that the line being soaped has air in it and all connections are mechanically tight. Repair all leaks before proceeding. _____

IV. BRAKE PIPE AND EQUALIZING RESERVOIR LEAKAGE
Controller #1

A. With the brake system fully charged (ER at 5.2 kg/cm^2 ± 0.07 kg/cm^2 (73.5 ± 1 psi), BP within 0.07 kg/cm^2 of ER), move the automatic handle of Controller #1 into the MINIMUM SERVICE position until ER gauge display has reduced to 4.7 ± 0.07 kg/cm^2 (67 ± 1 psi). _____

1. Note that BP gauge display reduces to within 0.07 kg/cm^2 (1 psi) of ER gauge. _____

B. Set the brake system to LEAD-OUT. _____

C. Move the automatic handle to the SERVICE position to reduce ER Test gauge pressure to 3.5 ± 0.07 kg/cm^2 (50 ± 1 psi). _____

D. Observe the BP and ER gauge displays for one minute and note the following:

1. BP does not reduce with ER. _____

2. BP does not reduce by more than 0.07 kg/cm^2 (1 psi). _____

3. BP pressure must not increase. _____

4. ER pressure remains at 3.5 ± 0.07 kg/cm^2 (50 ± 1 psi). _____

E. Place the automatic handle to the RUNNING position and note ER gauge pressure increases to 5.2 ± 0.07 kg/cm^2 (73.5 ± 1 psi). _____

F. Observe the BP gauge display for one minute and note that BP pressure must not increase. _____

G. Set the brake system to LEAD-IN and note BP charges to within .07 kg/cm^2 of ER. _____

V. AUTOMATIC BRAKE OPERATION - GOODS MODE
Controller #1

A. Place the Pass / Goods switch to Goods position.

B. Allow the brake system to recharge for a minimum of one minute and note the following:

1. ER Test gauge display is 5.2 ± .07 kg/cm^2 (73.5 ± 1psi). _____

2. BP Test gauge display is within 0.07 kg/cm^2 (1 psi) of ER. _____

3. BC Test gauge display is zero. _____

4. BCEP (20 Pipe test point) Test gauge display is zero _____

5. PC indicator is not lit. _____

C. Momentarily place the automatic handle to the MINIMUM SERVICE position, to reduce ER to 4.7 ± 0.07 kg/cm^2 (67 ± 1 psi) and note the following:

1. BP reduces to within 0.07 kg/cm^2 (1 psi) of ER. _____

2. BC applies to 1.1 ± 0.14 kg/cm^2 (16 ± 2 psi). _____

3. BCEP applies to 0.9 ± 0.14 kg/cm^2 (13 ± 2 psi) _____

D. Continue moving the automatic handle into SERVICE positions to reduce ER in 0.5 kg/cm^2 (7.1 psi) increments until ER has decreased to 3.5 ± 0.07kg/cm^2 (50 ± 1 psi) and note the following:

1. Each step results in the reduction of ER and BP displays. _____

2. BP is within 0.07 kg/cm^2 (1 psi) of ER gauge display. _____

3. With each decreasing step of ER and BP, a corresponding increase of BC pressure occurs to a maximum of 4.4 ± 0.14 kg/cm^2 (62 ± 2 psi). _____

E. Move the automatic handle to the RUNNING position and note the following:

1. BC gauge display reduces from the maximum value to 0.4 kg/cm^2 (6 psi) in 45 to 60 seconds and continues to zero when brakes are released. _____

2. ER display increases to 5.2 ± 0.07 kg/cm^2 (73.5 ± 1 psi). _____

3. BP gauge display is within 0.07 kg/cm^2 (1 psi) of ER. _____

F. Allow one minute for the system to fully recharge. _____

G. Move the automatic handle to the RELEASE position and note the following: (Assimilation test)

1. ER gauge display increases to 5.7 ± 0.07 kg/cm^2 (81 ± 1 psi) in 12 to 14 seconds. _____

2. BP gauge display is within 0.07 kg/cm^2 (1 psi) of ER. _____

3. BC & BCEP gauge remains at zero. _____

H. Note that ER reduces to 5.2 ± 0.07 kg/cm^2 (73.5 ± 1 psi) in less than 5.5 minutes. _____

1. BP gauge display is within 0.07 kg/cm^2 (1 psi) of ER. _____

I. Move the automatic handle directly to the FULL SERVICE position. Note the following:

1. ER test gauge reduces to 3.6 kg/cm^2 (50 psi) in 6-10 seconds and continues to reduce to 3.5 ± 0.07 kg/cm^2 (50 ± 1 psi). _____

2. BC test gauge increases from zero to 4.15 kg/cm^2 (59 psi) in 18 to 22 seconds. _____

3. BC test gauge continues to charge to 4.4 ± 0.14 kg/cm^2 (62 ± 2 psi). _____

J. Move the automatic handle to the RUNNING position and note the following:

1. ER charges to 5.2 ± 0.07 kg/cm^2 (73.5 ± 1 psi). _____

2. BP charges within 0.07 kg/cm^2 (1 psi) of ER. _____

3. BC pressure reduces to zero. _____

K. Place the automatic handle directly to the FULL SERVICE position to reduce ER to 3.5 ± 0.07 kg/cm^2 (50 ± 1 psi). Note the following:

1. BCEP test gauge increases from zero to 3.4 kg/cm^2 (48 psi) in 18 to 22 seconds. _____

2. Continues to charge to 3.6 ± 0.14 kg/cm^2 (51 ± 2 psi). _____

L. Place the automatic handle in the RUNNING position and allow one minute for the system to fully charge. _____

M. Place the automatic handle in the EMERGENCY position and note the following:

1. BP pressure rapidly reduces to zero. _____

2. PCS Open is indicated. _____

3. ER pressure reduces to zero. _____

4. BC gauge increases from zero to 4.15 kg/cm^2 (59 psi) in 18 to 20 seconds. _____

5. BC continues to charge to 4.4 ± 0.1 kg/cm^2 (62 ± 2 psi). _____

6. Automatic emergency timed sanding is provided for 60 ± 5.0 seconds. _____

7. After 60 seconds, the emergency can be reset. _____

N. Place the automatic handle to the RUNNING position, allow one minute for the system to fully charge and note the following:

1. ER gauge display is 5.2 ± 0.07 kg/cm^2 (73.5 ± 1 psi). _____

2. BP gauge display is within 0.07 kg/cm^2 (1 psi) of ER. _____

3. BC and BCEP gauge display reduces to zero. _____

4. PCS open is not indicated. _____

O. Open the Driver's emergency brake valve and note the following:

1. BP pressure rapidly reduces to zero. _____

2. PCS is indicated after approximately 20 seconds. _____

3. BC gauge increases from zero to 4.15 kg/cm^2 (59 psi) in 18 to 20 seconds. _____

4. BC continues to charge to 4.4 ± 0.14 kg/cm^2 (62 ± 2 psi). _____

5. Automatic emergency timed sanding is provided for 60 ± 5.0 seconds. _____

6. Allow 60 seconds before the emergency can be reset. _____

7. Close the emergency brake valve. _____

P. Open the Driver Assistant's emergency brake valve and note the following:

1. BP pressure rapidly reduces to zero. _____

2. PCS is indicated after approximately 20 seconds. _____

3. BC gauge increases from zero to 4.1 kg/cm^2 (59 psi) in 18 to 20 seconds. _____

4. BC continues to charge to 4.4 ± 0.14 kg/cm^2 (62 ± 2 psi). _____

5. Automatic emergency timed sanding is provided for 60 ± 5.0 seconds. _____

6. Allow 60 seconds before the emergency can be reset. _____

7. Close the emergency brake valve. _____

Q. Place the automatic handle to the RUNNING position, and note the following:

1. ER gauge display is 5.2 ± 0.07 kg/cm^2 (73.5 ± 1 psi). _____

2. BP gauge display is within 0.07 kg/cm^2 of ER. _____

3. BC pressure is zero. _____

4. PCS Open is not indicated.

5. Set Controller #1 to Trail, then Controller #2 to Lead-Out. Move Automatic handle to Running position to charge ER.

6. Set Controller #2 to Lead-In. Move Independent handle to Release. _____

VI. BRAKE PIPE AND EQUALIZING RESERVOIR LEAKAGE: Controller #2

A. With the brake system fully charged (ER at 5.2 kg/cm^2 ± 0.07 kg/cm^2 (73.5 ± 1 psi), BP within 0.07 kg/cm^2 of ER), move the automatic handle of Controller #1 into the MINIMUM SERVICE position until ER gauge display has reduced to 4.7 ± 0.07 kg/cm^2 (67 ± 1 psi).

1. Note that BP gauge display reduces to within 0.07 kg/cm^2 (1 psi) of ER gauge. _____

B. Set the brake system to LEAD-OUT. _____

C. Move the automatic handle to the SERVICE position to reduce ER Test gauge pressure to 3.5 ± 0.07 kg/cm^2 (50 ± 1 psi). _____

D. Observe the BP and ER gauge displays for one minute and note the following:

1. BP does not reduce with ER. _____

2. BP does not reduce by more than 0.07 kg/cm^2 (1 psi). _____

3. BP pressure must not increase. _____

4. ER pressure remains at 3.5 ± 0.07 kg/cm^2 (50 ± 1 psi). _____

E. Place the automatic handle to the RUNNING position and note ER gauge pressure increases to 5.2 ± 0.07 kg/cm^2 (73.5 ± 1 psi). _____

F. Observe the BP gauge display for one minute and note that BP pressure must not increase. _____

G. Set the brake system to LEAD-IN and note BP charges to within 0.07 kg/cm^2 of ER. _____

VII. AUTOMATIC BRAKE OPERATION - GOODS MODE: Controller #2

A. Allow the brake system to recharge for a minimum of one minute and note the following:

1. ER Test gauge display is 5.2 ± .07 kg/cm^2 (73.5 ± 1psi). _____

2. BP Test gauge display is within 0.07 kg/cm^2 (1 psi) of ER. _____

3. BC Test gauge display is zero. _____

4. BCEP (20 Pipe test point) Test gauge display is zero _____

5. PC indicator is not lit. _____

B. Momentarily place the automatic handle to the MINIMUM SERVICE position, to reduce ER to 4.7 ± 0.07 kg/cm^2 (67 ± 1 psi) and note the following:

1. BP reduces to within 0.07 kg/cm^2 (1 psi) of ER. _____

2. BC applies to 1.1 ± 0.14 kg/cm^2 (16 ± 2 psi). _____

3. BCEP applies to 0.9 ± 0.14 kg/cm^2 (13 ± 2 psi). _____

C. Continue moving the automatic handle into SERVICE positions to reduce ER in 0.5 kg/cm^2 (7.1 psi) increments until ER has decreased to 3.5 ± 0.07kg/cm^2 (50 ± 1 psi) and note the following:

1. Each step results in the reduction of ER and BP displays. _____

2. BP is within 0.07 kg/cm^2 (1 psi) of ER gauge display. _____

3. With each decreasing step of ER and BP, a corresponding increase of BC pressure occurs to a maximum of 4.4 ± 0.14 kg/cm^2 (62 ± 2 psi). _____

D. Move the automatic handle to the RUNNING position and note the following:

1. ER display increases to 5.2 ± 0.07 kg/cm^2 (73.5 ± 1 psi). _____

2. BP gauge display is within 0.07 kg/cm^2 (1 psi) of ER. _____

3. BC gauge display reduces from the maximum value to 0.4 kg/cm^2 (6 psi) in 45 to 60 seconds and continues to zero when brakes are released. _____

E. Allow one minute for the system to fully recharge. _____

F. Move the automatic handle to the RELEASE position and note the following: (Assimilation test)

1. ER gauge display increases to 5.7 ± 0.07 kg/cm^2 (81 ± 1 psi). _____

2. BP gauge display is within 0.07 kg/cm^2 (1 psi) of ER. _____

3. BC & BCEP gauge remains at zero. _____

G. Note that ER reduces to 5.2 ± 0.07 kg/cm^2 (73.5 ± 1 psi). _____

1. BP gauge display is within 0.07 kg/cm^2 (1 psi) of ER. _____

H. Move the automatic handle directly to the FULL SERVICE position. Note the following:

1. ER test gauge reduces to 3.6 kg/cm^2 (50 psi) in 6-10 seconds and continues to reduce to 3.5 ± 0.07 kg/cm^2 (50 ± 1 psi). _____

2. BC test gauge increases from zero to 4.15 kg/cm^2 (59 psi) in 18 to 22 seconds. _____

3. BC test gauge continues to charge to 4.4 ± 0.14 kg/cm^2 (62 ± 2 psi). _____

I. Move the automatic handle to the RUNNING position and note the following:

1. ER charges to 5.2 ± 0.07 kg/cm^2 (73.5 ± 1 psi). _____

2. BP charges within 0.07 kg/cm^2 (1 psi) of ER. _____

3. BC pressure reduces to zero. _____

J. Place the automatic handle directly to the FULL SERVICE position to reduce ER to 3.5 ± 0.07 kg/cm^2 (50 ± 1 psi). Note the following:

1. BCEP test gauge increases from zero to 3.4 kg/cm^2 (48 psi) in 18 to 22 seconds. _____

2. Continues to charge to 3.6 ± 0.14 kg/cm^2 (51 ± 2 psi). _____

K. Place the automatic handle in the RUNNING position and allow one minute for the system to fully charge.

L. Move Reverser handle to forward position. _____

M. Place the automatic handle in the EMERGENCY position and note the following:

1. BP pressure rapidly reduces to zero. _____

2. PCS Open is indicated. _____

3. ER pressure reduces to zero. _____

4. BC gauge increases from zero to 4.15 kg/cm^2 (59 psi) in 18 to 20 seconds. _____

5. BC continues to charge to 4.4 ± 0.1 kg/cm^2 (62 ± 2 psi). _____

6. Automatic emergency timed sanding is provided for 60 ± 5.0 seconds. _____

7. After 60 seconds, the emergency can be reset. _____

N. Place the automatic handle to the RUNNING position, allow one minute for the system to fully charge and note the following:

1. ER gauge display is 5.2 ± 0.07 kg/cm^2 (73.5 ± 1 psi). _____

2. BP gauge display is within 0.07 kg/cm^2 (1 psi) of ER. _____

3. BC and BCEP gauge display reduces to zero. _____

4. PCS open is not indicated. _____

O. Open the Driver's emergency brake valve and note the following:

1. BP pressure rapidly reduces to zero. _____

2. PCS is indicated after approximately 20 seconds. _____

3. BC gauge increases from zero to 4.15 kg/cm^2 (59 psi) in 18 to 20 seconds. _____

4. BC continues to charge to 4.4 ± 0.14 kg/cm^2 (62 ± 2 psi). _____

5. Automatic emergency timed sanding is provided for 60 ± 5.0 seconds. _____

6. Close the emergency brake valve. _____

7. Move the automatic handle to emergency to reset. _____

P. Place the automatic handle to the RUNNING position, and note the following:

1. ER gauge display is 5.2 ± 0.07 kg/cm^2 (73.5 ± 1 psi). _____

2. BP gauge display is within 0.07 kg/cm^2 of ER. _____

3. BC pressure is zero. _____

4. PCS Open is not indicated. _____

VIII. AUTOMATIC BRAKE OPERATION - PASSENGER MODE Controller #2

A. Place the Pass/Goods switch to PASSENGER position

B. Allow the brake system to recharge for a minimum of one minute and note the following:

1. ER Test gauge display is 5.2 ± 0.07 kg/cm^2 (73.5 ± 1 psi). _____

2. BP Test gauge display is within 0.07 kg/cm^2 of ER. _____

3. BC Test gauge display is zero. _____

4. BCEP (20 Pipe test point) Test gauge display is zero _____

5. PC indicator is not lit. _____

C. Momentarily place the automatic handle to the MINIMUM SERVICE position, to reduce ER to 4.7 ± 0.07 kg/cm^2 (67 ± 1 psi) and note the following:

1. BP reduces to within 0.07 kg/cm^2 (1 psi) of ER. _____

2. BC applies to 1.1 ± 0.14 kg/cm^2 (16 ± 2 psi). _____

3. BCEP applies to 0.9 ± 0.14 kg/cm^2 (13 ± 2 psi). _____

D. Continue moving the automatic handle into SERVICE positions to reduce ER in 0.5 kg/cm^2 (7 psi) increments until ER has decreased to 3.5 kg/cm^2 (51 ± 1 psi)and note the following:

1. Each step results in the reduction of ER and BP displays. _____

2. BP is within 0.07 kg/cm^2 (1 psi) of ER gauge display. _____

3. With each decreasing step of ER and BP, a corresponding increase of BC pressure occurs to a maximum of 4.4 ± 0.14 kg/cm^2 (62 ± 2 psi). _____

E. Move the automatic handle to the RUNNING position and note the following:

1. ER display increases to 5.2 ± 0.07 kg/cm^2 (73.5 ± 1 psi). _____

2. BP gauge display is within 0.07 kg/cm^2 of ER. _____

3. BC gauge display reduces from the maximum value to 0.4 kg/cm^2 (6 psi) in 15 to 20 seconds and continues to zero when brakes are released. _____

F. Allow one minute for the system to fully recharge. _____

G. Move the automatic handle to the FULL SERVICE position and note the following:

1. ER test gauge reduces to 3.6 kg/cm^2 (51 psi) in 6-10 seconds and continues to reduce to 3.5 ± 0.14 kg/cm^2 (50 ± 1 psi). _____

H. Move the automatic handle directly to RUNNING position and allow brake pipe to recharge.

I. Place the automatic handle to FULL SERVICE and note:

1. BC test gauge increases from zero to 4.15 kg/cm^2 (59 psi) in 4 to 6 seconds. _____

2. BC test gauge continues to charge to 4.4 ± 0.14 kg/cm^2 (62 ± 2 psi). _____

J. Move the automatic handle to the RUNNING position and note the following:

1. ER charges to 5.2 ± 0.07 kg/cm^2 (73.5 ± 1 psi). _____

2. BP charges within 0.1 kg/cm^2 of ER. _____

3. BC pressure reduces to zero. _____

K. Place the automatic handle directly to the FULL SERVICE position and note the following.

1. BCEP test gauge increases from zero to 3.4 kg/cm^2 (48 psi) in 4 to 6 seconds. _____

2. Continues to charge to 3.6 ± 0.14 kg/cm^2 (51 ± 2 psi). _____

L. Place the automatic handle in the RUNNING position and allow one minute for the system to fully charge. _____

M. Place the Reverser handle in Forward position. _____

N. Place the automatic handle in the EMERGENCY position and note the following:

1. BP pressure rapidly reduces to zero. _____

2. PCS Open is indicated. _____

3. ER pressure reduces to zero. _____

4. BC gauge increases from zero to 4.1 kg/cm^2 (59 psi) in 3 to 5 seconds. _____

5. BC continues to charge to 4.4 ± 0.14 kg/cm^2 (62 ± 2 psi). _____

6. Automatic emergency timed sanding is provided for 60 ± 5 seconds. _____

7. After 60 seconds, the emergency can be reset. _____

O. Place the automatic handle to the RUNNING position, allow one minute for the system to fully charge and note the following:

1. ER gauge display is 5.2 ± 0.07 kg/cm^2 (73.5 ± 1 psi). _____

2. BP gauge display is within 0.07 kg/cm^2 (1 psi) of ER. _____

3. BC and BCEP gauge display reduces to zero. _____

4. PCS open is not indicated. _____

P. Place the automatic handle in the EMERGENCY position and note the following:

1. BP pressure rapidly reduces to zero. _____

2. PCS Open is indicated. _____

3. ER pressure reduces to zero. _____

4. BCEP gauge increases from zero to 3.4 kg/cm^2 (48 psi) in 3 to 5 seconds. _____

5. BCEP continues to charge to 3.5 ± 0.14 kg/cm^2 (51 ± 2 psi). _____

6. Automatic emergency timed sanding is provided for 60 ± 5 seconds. _____

Q. Place the automatic handle to the RUNNING position, allow one minute for the system to fully charge and note the following:

1. ER gauge display is 5.2 ± 0.07 kg/cm^2 (73.5 ± 1 psi). _____

2. BP gauge display is within 0.07 kg/cm^2 (1 psi) of ER. _____

3. BC and BCEP gauge display reduces to zero. _____

4. PCS open is not indicated. _____

R. Place the automatic handle to the EMERGENCY position for 60 seconds to reset, then to RUNNING position, allow one minute for the system to fully recharge and note the following:

1. ER gauge display is 5.2 ± 0.07 kg/cm^2 (73.5 ± 1 psi). _____

2. BP gauge display is within 0.07 kg/cm^2 (1 psi) of ER. _____

3. BC pressure is zero. _____

4. PCS Open is not indicated. _____

IX. TRAIL OPERATION:

A. Set the Pass/Goods switch to GOODS position.

B. Place the automatic handle to the MINIMUM SERVICE position and note the following:

1. ER reduces to 4.7 ± 0.07 kg/cm^2 (67 ± 1 psi). _____

2. BP reduces to within 0.07 kg/cm^2 (1 psi) of ER. _____

3. BC applies to 1.1 ± 0.14 kg/cm^2 (16 ± 2 psi). _____

C. Set the air brake system for TRAIL using the brake controller Lead/Trail switch and note the following:

1. ER decreases to zero psi. _____

2. BP pressure remains unchanged. _____

3. BC remains unchanged. _____

D. Momentarily lift bail off ring on the independent brake valve handle and note that BC pressure remains unchanged. _____

E. Release the bail off ring on the independent handle and move the independent handle to the MAX position and note that BC pressure remains unchanged. _____

F. Move the automatic and independent handles to their RUNNING & RELEASE positions respectively. _____

G. Set the system for LEAD-OUT until ER charges to 5.2 ± 0.07 kg/cm^2 (73.5 ± 1 psi), then switch to LEAD-IN Allow 1 minute for system to recharge. _____

X. HELPER MODE OPERATION:

A. Move the automatic brake handle to MINIMUM SERVICE, reduce ER to 4.7 ± 0.07 kg/cm^2 (67 ± 1 psi) and increase BC to 1.1 ± 0.14 kg/cm^2 (16 ± 2 psi). _____

B. Set the air brake system for LEAD-OUT mode with the brake controller Lead/Trail switch. _____

C. Move the automatic brake handle in steps toward FULL SERVICE position and note that BP does not reduce with ER pressure and BC pressure remains unchanged. _____

D. Momentarily lift the bail off ring on the independent brake handle and note that BC pressure reduces to zero. _____

E. Release the bail off ring on the independent brake handle. _____

F. Move the automatic brake handle to RUNNING position and note the ER pressure increases to 5.2 ± 0.07 kg/cm^2 (73.5 ± 1 psi). _____

G. Move the independent brake handle to the MAX position and note BC increases to 4.4 ± 0.14 kg/cm^2 (62 ± 2 psi). _____

H. Move the independent brake handle to RELEASE position and note that BC pressure reduces to zero. _____

I. Set the air brake system for LEAD-IN mode and note that BP is within 0.07 kg/cm^2 (1 psi) of ER. _____

XI. INDEPENDENT BRAKE OPERATION:

A. Independent Brake Control - Brake Cylinder

1. Move the independent handle in steps toward the MAX and back to Release position, pausing at each step and noting that BC gauge display increases and decreases in steps. _____

2. Place the independent handle in the MAX position and note that BC test gauge increases to 4.85 kg/cm^2 (69 psi) in 4 to 6 seconds and continues to 5.2 ± 0.14 kg/cm^2 (74 ± 2 psi). _____

3. Place the independent handle directly to the RELEASE position and note that the BC test gauge reduces to 0.4 kg/cm^2 (6 psi) in 8 to 12 seconds and continues to zero. _____

B. Independent Brake Control - Brake Cylinder Equalizing Pipe

1. Move the independent handle in steps toward the MAX and back to Release position, pausing at each step and noting that BCEP gauge display increases and decreases in steps. _____

2. BCEP gauge increases from zero to 3.4 kg/cm^2 (48 psi) in 4 to 6 seconds. _____

3. BCEP continues to charge to 3.5 ± 0.14 kg/cm^2 (50 ± 2 psi). _____

4. Place the independent handle directly to the RELEASE position and note that the BCEP test gauge reduces to 0.4 kg/cm^2 (6 psi) in 8 to 12 seconds and continues to zero. _____

C. Quick Release of Automatic Brake (“Bail Off”) - Brake Cylinder

1. Move the automatic handle into the MINIMUM SERVICE position and note that Brake Cylinder applies. _____

2. Momentarily lift the bail-off ring on the independent handle and note that the BC gauge display rapidly reduces to zero and does not reapply. _____

3. Move the automatic handle into FULL SERVICE position and note that BC reapplies. _____

4. Lift the bail-off lift ring handle for four seconds, then release and note that BC gauge reduces to zero. _____

5. Move the independent handle to the MAX position until BC has increased to 5.2 ± 0.14 kg/cm^2 (74 ± 2 psi). _____

6. Lift the bail-off lift ring handle for four seconds, then release and note that BC gauge remains at 5.2 ± 0.14 kg/cm^2 (74 ± 2 psi)as originally set. _____

7. Move the independent handle to the RELEASE position. _____

8. Move the automatic handle to the RELEASE position for one minute. _____

9. Move the automatic handle to Emergency position . _____

10. Lift the Bail-off ring until BC reduces to zero. _____

11. Release the Bail-off ring and note that BC re-applies. _____

D. Brake Cylinder Gauge

1. Move the independent handle to the MAX position and note that BC gauge display is 5.2 ± 0.14 kg/cm^2 (74 ± 2 psi). _____

2. Close the #1 truck cut out cock and note that the BC gauge display reads zero. _____

3. Place the independent handle in RELEASE position, wait 5 seconds, then back to MAX position and note that BC gauge display remains at zero. _____

4. Open the #1 truck cut out cock and note that BC gauge display is 5.2 kg/cm^2 (74 ± 2 psi). _____

XII. SAFETY CONTROL:

A. Alerter Penalty

Note: Reverser must be selected

1. With the Independent handle in the RELEASE position and the Automatic in the RUNNING position allow system to fully charge for 2 minutes. _____

2. Allow Alerter to time out. _____

3. When the Alerter times out note that the following occurs:

a) ER gauge display immediately starts to reduce from 5.2 ± 0.07 kg/cm^2 (73.5 ± 1 psi) and reduces to zero. _____

b) PCS open is indicated immediately. _____

c) BP gauge display reduces to within 0.07 kg/cm^2 of ER. _____

d) BC gauge increases to 4.4 ± 0.14 kg/cm^2 (62 ± 2 psi).. _____

4. Reset Alerter. _____

5. Move the Automatic handle to the FULL SERVICE position for 10 sec to reset the PENALTY application and note that PCS open indication is removed. _____

6. Move the Automatic handle to the running position and note that ER and BP recharge and BC reduces to zero. _____

7. Move the Independent handle to the MAX position. _____

8. Activate Alerter and note that the Alerter alarm and penalty does not occur. _____

9. Place the Independent handle to the RELEASE position and the Automatic to the RUNNING position. _____

B. EM2000 Communication Loss

1. Verify the Independent handle is in RELEASE position and the Automatic handle is in RUNNING position. _____

2. Open the EM2000 circuit breaker and note the following:

   a) Exhaust of BP occurs in approximately 5 to 13 seconds after loss of EM2000. _____

   b) ER reduces to zero psi. _____

   c) Brake cylinders and BCEP apply. _____

   d) Wait one (1) minute. _____

3. Close EM2000 circuit breaker, wait 30 seconds and note:

   a) ER test gauge is zero. _____

   b) BP test gauge is 0.6 to 1.0 kg/cm^2 (9 to 15 psi). _____

   c) BC test gauge is 4.4 ± 0.14 kg/cm^2 (62 ± 2 psi).and BCEP test gauge is 3.6 ± 0.14 kg/cm^2 (51 ± 2 psi). _____

   d) PCS open is indicated. _____

4. Move Automatic handle to the FULL SERVICE position for 10 seconds to reset. _____

5. Move Automatic handle to RUNNING and note:

   a) ER gauge display increases to 5.2 ± 0.07 kg/cm^2 (73.5 ± 1 psi). _____

   b) BP gauge display increases to ± 0.07 kg/cm^2 (± 1 psi) of ER. _____

   c) BC gauge reduces to zero _____

   d) PCS is not lit. _____

C. POWER LOSS PENALTY (LEAD)

1. Move the Independent handle to the RELEASE position and the Automatic to the RUNNING position. _____

2. Open the air brake circuit breaker and note:

   a) Exhausting of BP occurs immediately. _____

   b) ER reduces to zero. _____

   c) BC test gauge and BCEP test gauge are 3.8 ± 0.14 kg/cm^2 (54 ± 2 psi). _____

3. Move the Automatic handle to the FULL SERVICE position.

4. Close the AIR BRAKE CIRCUIT BREAKER to the CCB System and note:

   a) ER test gauge display is zero. _____

   b) BP test gauge display is 0.6 to 1.0 kg/cm^2 (9 to 15 psi). _____

   c) BC test gauge and BCEP test gauge are 3.8 ± 0.1 kg/cm^2 (54 ± 2 psi). _____

   d) PCS open indication is lit. _____

5. Move the Automatic handle to the FULL SERVICE position for 10 seconds to reset and note that PCS is not lit. _____

6. Move the Automatic handle to RUNNING and note:

a) ER gauge display increases to 5.2 ± 0.07 kg/cm^2 (73.5 ± 1 psi). _____

b) BP gauge display increases to ± 0.07 kg/cm^2 of ER. _____

c) BC gauge reduces to zero. _____

D. POWER LOSS PENALTY (TRAIL)

1. Set the brake system Lead Trail switch to TRAIL position and note that ER reduces to zero and BP does not change. _____

2. Open the air brake circuit breaker and note that brake cylinder pressure does not increase, the AIR BRAKE and PCS open indications are on the EM2000 display. _____

3. Close the air brake circuit breaker and note that the AIR BRAKE FAIL and PCS Open indications in the cab clear. _____

4. Set the Lead-Trail switch to the LEAD-OUT position and note that ER increases to 5.2 ± 0.07 kg/cm^2 (73.5 ± 1 psi). _____

5. Set the Lead-Trail switch to LEAD-IN and move automatic handle to RUNNING and note that BP increases to within 0.07 kg/cm^2 of ER. _____

XIII. ELECTRO PNEUMATIC 20 PORTION BACKUP:

A. DISCONNECT MV16T Magnet Valve Plug. _____

B. AUTOMATIC BRAKE OPERATION

1. Momentarily move Automatic handle to MIN SERVICE position and note BC applies. _____

2. Move automatic handle to FULL SERVICE position to reduce ER to 3.5 kg/cm^2 (50 ± 1 psi) and note that BC gauge display increases to 3.6 ± 0.14 kg/cm^2 (51 ± 2 psi). _____

3. Move Automatic handle to RUNNING position, note that BC pressure reduces to zero. Allow one (1) minute for system to charge. _____

C. INDEPENDENT BRAKE OPERATION

1. Move the Independent handle in steps toward the "MAX" position, pausing at each step and note that BC gauge

display increases in steps. _____

2. Move the Independent handle into the "MAX" position and note that BC gauge display is 3.6 ± 0.14 kg/cm^2 (51 ± 2 psi). _____

3. Move the Independent handle in steps toward the RELEASE position, pausing at each step. Note that BC gauge display decreases in steps. _____

4. Move the Independent handle in the "RELEASE" position and note that BC gauge display is zero. _____

D. BAILOFF OF AUTOMATIC APPLICATION

1. Momentarily move the Automatic handle to the MIN position and note BC applies. _____

2. Lift bail-off ring on the Independent handle and note that BC gauge display reduces to zero. _____

3. Wait one minute and note that BC gauge remains at zero. _____

4. Move Automatic handle to full service and note BC increases to 3.6 ± 0.14 kg/cm^2 (51 ± 2 psi). _____

5. Move the Automatic handle to the RUNNING position and allow the system to charge for one (1) minute. _____

E. EMERGENCY

1. Move the Automatic handle directly to the EMERGENCY position and note that BC gauge increases to 3.6 ± 0.14 kg/cm^2 (51 ± 2 psi). _____

2. Connect MV16T Magnet Valve Plug. _____

3. After 60 seconds, place the Automatic handle to the RUNNING position and allow the system to charge for one (1) minute. _____

XIV. BRAKE PIPE MAINTAINING:

A. Install a 3/16" test orifice at the “F” end brake pipe end connection hose. _____

B. Move the automatic brake handle into the SERVICE position. _____

C. Slowly open the brake pipe angle cock with the test orifice and note the following::

1. That BP does not decrease by more than 0.2 to 0.3 kg/cm^2 (3 to 4 psi). _____

2. That BC does not increase by more than 0.5 to 0.6 kg/cm^2 (7 to 9 psi). _____

D. Close the brake pipe angle cock. _____

E. Move the automatic brake handle to RUNNING position. _____

F. Remove the 3/16" test orifice from the brake pipe end connection hose. _____

G. Allow three minutes for system charging. _____

XV. BREAK IN TWO PROTECTION:

CAUTION: Care must be exercised when opening and closing end connection cut out cocks so as to avoid injury by whipping of end connection hoses.

A. Open the end connection cut out cocks at either the “F” or “R” end of the locomotive in the following sequence: brake cylinder equalizing pipe, main reservoir equalizing pipe and brake pipe, and note the following:

a) An emergency brake application occurs with a PCS indication. _____

b) BC increases to 4.4 ± 0.14 kg/cm^2 (62 ± 2 psi) _____

c) BCEP remains at zero psi _____

d) Brakes remain applied for 5 minutes. _____

e) Move Automatic handle to emergency for 60 seconds to reset then move handle to RUNNING. _____

XVI. MULTIPLE UNIT TEST - TEST CART METHOD

CAUTION: Care should be exercised when opening and closing end connection cutout cocks so as to avoid injury by whipping of end connection hoses.

A. SETUP

1. Connect the brake pipe (BP), main reservoir equalizing pipe (MREP), brake cylinder equalizing pipe (BCEP) trainline hoses to one end of the locomotive. _____

2. Close all cut out cocks on the test cart and open the locomotive end connection cut out cocks at the hose connections to test cart. _____

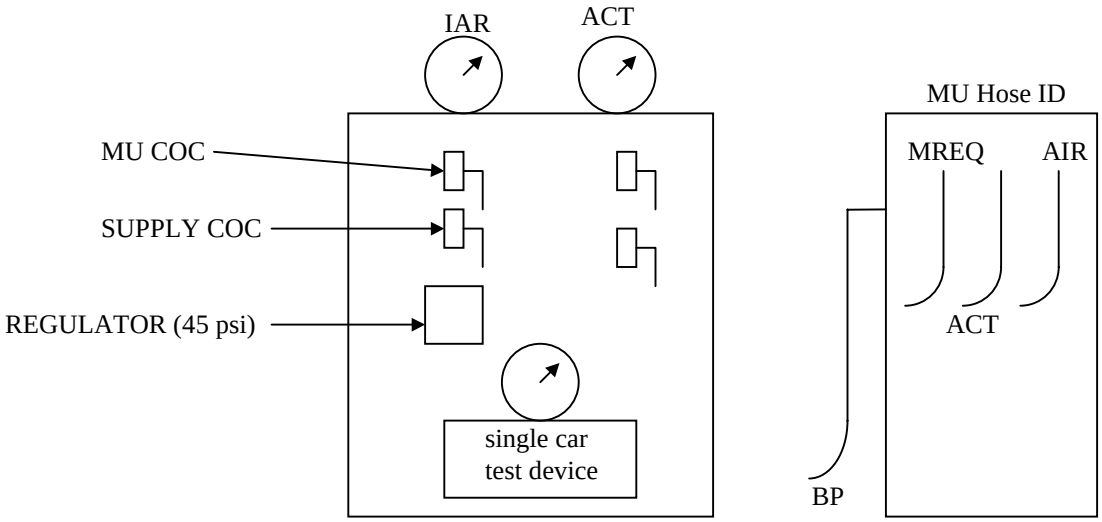

AIR BRAKE TEST CART

B. LEAD UNIT OPERATION

1. Move the independent brake handle of the locomotive to the MAX position and note the following:

   a) The AIR gauge on the test cart registers 50 ± 2.0 psi. _____

   b) 50 ± 2.0 psi is present at the remaining three BCEP end connection hoses. _____

2. Move the independent brake handle of the locomotive to the RELEASE position and note that the AIR gauge on the test cart returns to zero pressure and the three remaining BCEP end connections have zero pressure. _____

3. Move the automatic brake valve handle to FULL SERVICE position and note the AIR gauge on the test cart registers 50 ± 2.0 psi. _____

4. Lift the bail off ring of the independent brake handle of the locomotive and note the following while the ring is lifted:

   a) The pressure at the AIR gauge reduces rapidly to zero. _____

   b) The three remaining end hoses have zero pressure. _____

5. Release the bail off lift ring and note that the AIR gauge on the air brake test cart remains at zero. _____

C. Trail Unit Operation

1. Set the brake system to TRAIL with the engineer's Lead-Trail switch. _____

2. Open the AIR MU Cut out cock on the air brake test cart. _____

3. Open the AIR supply cut out cock on the test cart and note that locomotive brake cylinder pressure increases to 45 ± 1 psi when the air supplied by the test cart pressure regulator is 65 ± 2 psi. _____

4. Open the Driver's emergency valve and note the pressure at the test cart BC gauge display reduces to 45 psi. _____

5. Close the AIR supply cut out cock and note that locomotive brake cylinder pressure is zero. _____

6. Set the brake system to LEAD-IN with the engineer's Lead-Trail switch. _____

XVII. MULTIPLE UNIT TEST - TWO LOCOMOTIVE METHOD

CAUTION: Care must be exercised when opening and closing end connection cut out cocks so as to avoid injury by whipping of end hoses.

NOTE: Section XVII can be done by using a second unit (designated as Unit #2) which has been qualified by this test procedure and set up for LEAD operation.

A. Lead Unit Operation

1. Select Lead-In.

   a) Set ER to 5.2 kg/cm^2 (73.5 psi) _____

b) BP is within 0.07 kg/cm^2 (1 psi). _____

2. Move the independent brake handle to FULL position and note:

a) BC increases to 5.2 kg/cm^2 (74 $\pm$ 2 psi). _____

b) The pressure at all the BCEP end connections is 3.6 $\pm$ 0.1 kg/cm^2 (51 $\pm$ 2 psi). _____

3. Move the independent handle to RELEASE position and note:

a) The pressure at all the BCEP end connections is zero psi. _____

B. Trail Operation

1. Set up Unit 1 for TRAIL _____

2. Connect the same function MU hoses on units #1 and #2 together. _____

a) Verify that unit #2 is set up for LEAD IN operation _____

b) Verify that ER on unit is set for 5.2 kg/cm^2 (73.5 psi). _____

3. Open the end connection cut out cocks having the MU hoses connected. _____

4. Move the automatic and independent brake handles on unit #2 to the RUNNING and RELEASE positions and note that:

a) BP on both units is approximately 5.2 kg/cm^2 (73.5 psi). _____

b) The brakes are released on unit #1. If the brakes are not released on unit #1, make a full service reduction and release on unit #2 and note that the brakes on unit #1 are released. _____

5. Allow one (1) minute for recharging. _____

6. Move automatic brake handle on unit #2 to the FULL position and note:

a) BC on unit #1 increases to 4.4 ± 0.14 kg/cm^2 (62 ± 2 psi). _____

7. Bail off brakes from unit #2 and note:

a) BC on both units reduces to zero psi. _____

8. Move the automatic handle to RUNNING position and recharge the system for one (1) minute

9. Move the independent handle to FULL position and note:

a) BC increases to 5.2 ± 0.14 kg/cm^2 (74 ± 2 psi). _____

10. Move the automatic handle to FS position and note:
a) BC on both units reduces to 4.4 ± 0.14 kg/cm^2 (62 ± 2 psi). _____

XVIII. SYSTEM SELF TEST:

A. The brake system is equipped with a self test routine that can be accessed through the EM2000 maintenance screen. The following test procedure provides instructions for running the system self test routine. The self test routine should be run as part of the normal air brake test procedure.

B. Before initiating a Self-Test verify the following:

1. Locomotive speed is zero. _____

2. The hand brake is applied or the locomotive wheels are chocked. _____

3. The locomotive is set up as an isolated unit in Lead-In mode. _____

4. If the unit has multiple controllers, a single controller is selected. _____

5. The automatic and independent brake valve handles on the selected controller are in RUNNING and RELEASE. _____

6. The brake valve handles on the inactive controller are in FULL SERVICE and MAXIMUM. _____

7. The main reservoir pressure is at least 7.2 kg/cm^2 (102 psi). _____

8. The brake pipe is fully charged and brake cylinder pressure is exhausted. _____

Note: In the event that brake pipe cannot charge, a self test can still be run as long as the 60 second timer has expired.

C. Running the Self Test

1. From the EM2000 Self-Test menu, select “Air Brake Test.”

2. From the Air Brake Test menu select “Continue.”

3. Wait for the successful completion of the test as noted in the message area. _____

4. From the Air Brake test menu select END TEST.

5. If necessary reset the Emergency brake application.

XIX. SINGLE CAR TEST:

Note: All previous testing has been conducted at 5.2 ± 0.07 kg/cm^2 (73.5 ± 1 psi) brake pipe pressure and the single car test is conducted at 70 psi brake pipe. Therefore the locomotive may have an initial charge from a 73 psi brake pipe which must be dissipated before brakes can be fully released by the single car test. An overcharge can be dissipated by successive applications and releases of the brake as controlled by the single car test device. The overcharge is dissipated when brake cylinder pressure is zero with brake pipe fully charged from the single car test device at 70 psi.

A. Condition the locomotive for dead shipping per the instructions of Section XXVII of this ETI (keep the air brake circuit breaker closed) _____

B. Single Car Test Unit per AI 2484 _____

C. Open the air brake circuit breaker . _____

D. Single car test the unit per AI 2484. _____

XX. BRAKE PIPE RESTRICTION TEST:

A. Test unit for brake pipe restriction per ETI 456. For this locomotive, the high pressure setting is 49 psi and the low pressure condemning pressure is 5 psi. Also note that the locomotive must be single car tested per AI 2484 rather than AI 1892 as referenced in the preparation section of ETI 456. _____

XXI. REMOVAL OF TEST GAUGES:

A. Remove the ER, BC and BP pressure test gauges from the pneumatic control unit. _____

XXII. WARNING DEVICES:

A. Verify that the bell can be operated from the push buttons on engineer's console. _____

B. With the reverser in the forward position depress the horn push button on the engineer's console and note that the forward horn only sounds. _____

C. With the reverser in the reverse position note that only the rearward facing horn sounds when the horn push button on the engineer's console is depressed. _____

D. With the reverse centered, note that when the horn push button on the engineer's console is pressed, both the forward and rearward facing horns sound. _____

XXIII. SANDING SYSTEM:

A. Check that the sand delivery nozzles are aligned properly and 6.4 cm (2.5 in) above the rail. _____

B. Note that when operated, the sanders apply and release in 2 to 3 seconds from the time the sanding switch is closed or opened. _____

XXIV. WINDSHIELD WIPERS:

A. Verify that all windshield wipers and washers operate properly. _____

XXV. SHIPPING DEAD:

A. Move the automatic handle to the FULL SERVICE position. _____

B. Set up the air brake system for TRAIL mode with the engineer's console Lead-Trail switch. _____

C. Move the independent handle to the RELEASE position. _____

D. If the unit is being shipped without the engine running, open the Air Brake circuit breaker. If the unit is being shipped with the engine running the air brake circuit breaker should remain closed. _____

E. If the unit is being shipped with the engine running, open the Automatic Drain Valve circuit breaker, Air Dryer circuit breaker, and Fuel Gauge Circuit Breaker. _____

F. Open the Dead Engine cut out cock. _____

G. Open all MREP and BCEP end connection cut out cocks. _____

H. If the unit is being shipped with the engine running, manually override the compressor control magnet valve. _____

I. Open the #2 main reservoir drain valve and reduce main reservoir pressure to 1.1 kg/cm^2 (15 psi) or less. _____

J. Close all manual MR and MR filter drain valves _____

K. Verify that the emergency brake valves are closed. _____

L. Isolate all safety control devices. _____

M. Release the hand brake if applied. _____

N. Verify that the truck BC cut out cocks are open. _____