CHAPTER VI

Direct Current Relays

Published by the Signal Section, A. A. R.
59 East Van Buren Street, Chicago 5, Ill.

CONTENTS

	Page
General	3
Types of direct current relays	3
Theory of an electromagnet as applied to the operation of direct current relays	3
Neutral relays	4
Coils	5
Cores	6
Armature	7
Air gap	7
Contacts	7
Binding posts	8
Relay supports	8
Polarized relays	8
Retained neutral polarized relays	10
Quick drop-away relays	12
Slow drop-away relays	13
Slow pick-up relays	14
Time element relays	14
Electromagnetic type	14
Motor-operated type	17
Thermal type	19
Flasher relays	21
Overload relays	23
Biased relays	26
Interlocking relays	29
Power transfer relays	32
Approach lighting relays	33
Light-out relays	34
Two-rate charge control relays	36
Plug-in type relays	38
Relay coil combinations	42
Inspections and tests	44
Questions on Chapter VI	47

Principles and Practices

CHAPTER VI

Direct Current Relays

REVISED JANUARY 1959

Published By
Association of American Railroads, Signal Section
59 East Van Buren Street, Chicago 5, Ill.

Copyright, 1959, By
Association of American Railroads, Signal Section
(printed in the united states of america)

General.

In railway signaling systems there is no apparatus that is more essential to successful operation than the relay. The Signal Section, Association of American Railroads, defines Relay as: A device that is operative by a variation in the conditions of one electric circuit to affect the operation of other devices in the same or another electric circuit.

In a track circuit the relay is arranged to close its front contacts on the passage of a comparatively weak current in the rails and to open those contacts when the track circuit is shunted by a train. The closing of the front or back contacts completes a circuit in which a current flows to operate the signals or other apparatus as desired. The same principle applies, if necessary, to operate apparatus located at some distance from the controlling point. The relay, located at the outlying point, is energized by a comparatively weak current transmitted over wires from the controlling point. When the control circuit is closed it energizes the relay, closing its contacts, completing a circuit to the apparatus to be operated. Usually all signal circuits are designed to operate on the closed circuit principle and therefore the relays are designed to have a positive drop-away upon de-energization of the coils.

Relays are of various types of construction, depending on the service in which used. This chapter will deal with relays used in signal work, operated by direct current, and unless otherwise specified those that are used in vital circuits, the function of which affects the safety of train operation. The arrangement of circuits controlling relays, circuits controlled by them, relays operated by alternating current, and those used in non-vital circuits, the function of which does not affect the safety of train operation, are described in other chapters.

Types of direct current relays.

Direct current relays are commercially classified as neutral, biased, polar, polarized, flasher, light-out, overload, ground detector, interlocking, power transfer, and others. Under several of these classifications there are a number of special purpose designs. For example, both neutral and polarized relays can be made slow pick-up, slow drop-away, quick drop-away, or a combination of these features.

A track relay, which may be either neutral or polarized, has coils of low resistance, usually 0.5 ohm to 4 ohms, and receives its operating energy through conductors of which track rails are the essential part.

A line relay, which also may be either neutral or polarized, has coils of comparatively high resistance, usually 225 ohms to 2,000 ohms, and receives its operating energy through line or local circuits.

Theory of an electromagnet as applied to the operation of direct current relays.

The following general principles of the operation of an electromagnet should be borne in mind throughout the study of this chapter.

As an electric current is transmitted through or along a wire, it produces magnetic lines of force in the form of circumferences of circles about the axis of

through the center of this coil become quite strong and, with a given amount of current flowing in the circuit, the magnetizing force increases in proportion to the number of turns of wire. For example, a coil of 100 turns of wire with a given current flowing through it will have ten times the magnetizing force of a coil of ten turns with the same current flowing through it. Likewise, any increase in current through a coil will increase the magnetizing force in proportion to the increase in current. Therefore, a coil of ten turns of wire with 1 ampere of current flowing will have the same magnetizing force as a coil of 100 turns with 0.1 ampere of current flowing.

The magnetizing force is determined by multiplying the number of turns of wire by the current flow in amperes and is known as ampere turns. This magnetizing force produces magnetic flux or lines of force.

An iron or steel core inserted in this coil will concentrate and increase these magnetic lines of force as it offers a low reluctance (low magnetic resistance) path, but the amount is limited by the saturation of the magnetic circuit. This amount varies with the quality and cross-section of the magnetic material and the air gaps. The quantity of magnetism or magnetic flux, as it is called, is the total number of magnetic lines of force passing through the magnetic circuit.

Wire wound around a core in one direction and with current flowing through the wire in a given direction will produce a north magnetic pole at one end and a south magnetic pole at the other end of the core. By reversing the flow of current or the direction of winding around the core, the magnetic poles will be reversed.

The core used in the coils is of a specially selected iron or steel, very susceptible to magnetism, but just as easily demagnetized; otherwise, the core would become a permanent magnet. It is desired that the core become a magnet only when under the influence of an electric current. Such a core with its coil is called an electromagnet.

The most common form of electromagnet used in direct current relays is the U-shaped electromagnet consisting of two cores over which are placed the magnetizing coils, one or more bars or plates of iron or steel (yoke, sometimes referred to as the back strap) secured across the top of the cores, and a strap or piece of iron or steel (armature) suspended beneath the cores. The yoke and armature material must also be specially selected for the same characteristics as the cores. The armature is the movable part of the electromagnet completing the magnetic circuit from one core to the other. It is necessary that the current in one coil should flow around its core in a direction opposite to that in the other coil; otherwise, the magnetic flux produced in the two cores would oppose each other and form like poles at the corresponding ends with the result that the magnetic attraction becomes extremely low.

For a more complete theory of magnetism, consult Chapter XXII—Fundamentals of Electricity or any standard textbook on electricity and magnetism.

Neutral Relays

The Signal Section, A.A.R., defines Neutral Relay as: A relay which operates in response to a predetermined change of the current in the controlling circuit, irrespective of the direction of the current.

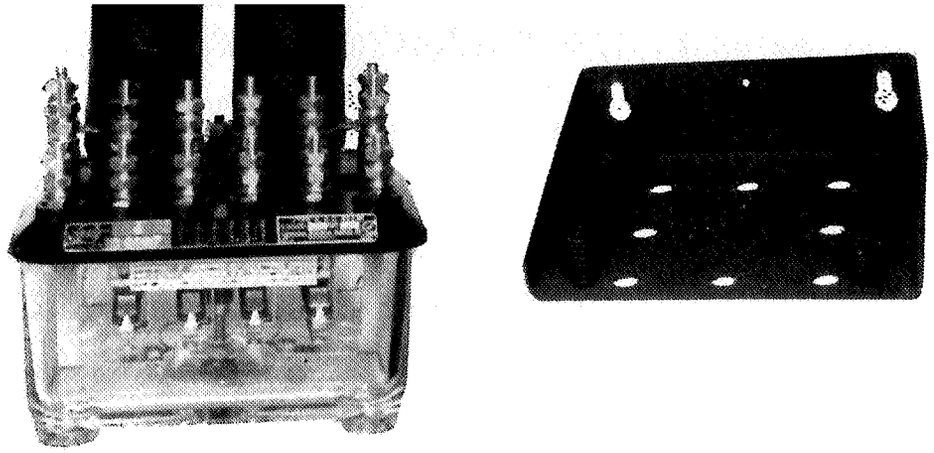

Fig. 1.
Four-Point Neutral Relay, Wall or Shelf Type.

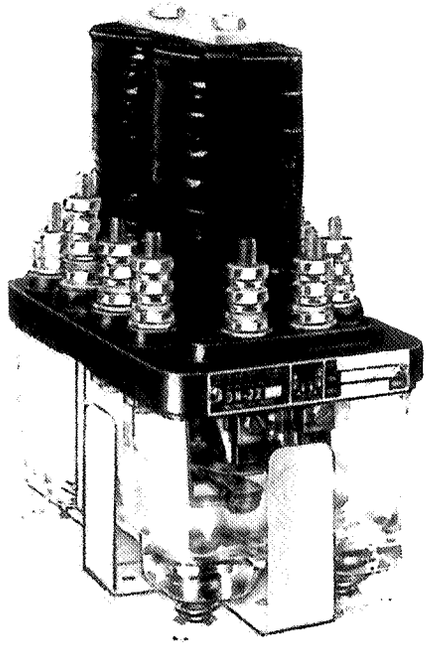

Fig. 2.
Two-Point Neutral Relay.

Generally, all moving parts are enclosed in a sealed transparent dust-tight case. Referring to Fig. 3—the principal parts of a wall or shelf-mounted neutral relay are: coils, cores, yoke (back strap), armature, movable contacts, front contacts, back contacts, flexible (heel) connectors, and binding posts.

Coils.

Each relay usually has two coils with a tubular center to accommodate a core. The coils are made up of a large number of turns of small gage, soft-drawn copper wire, the size and number of turns depending on the resistance

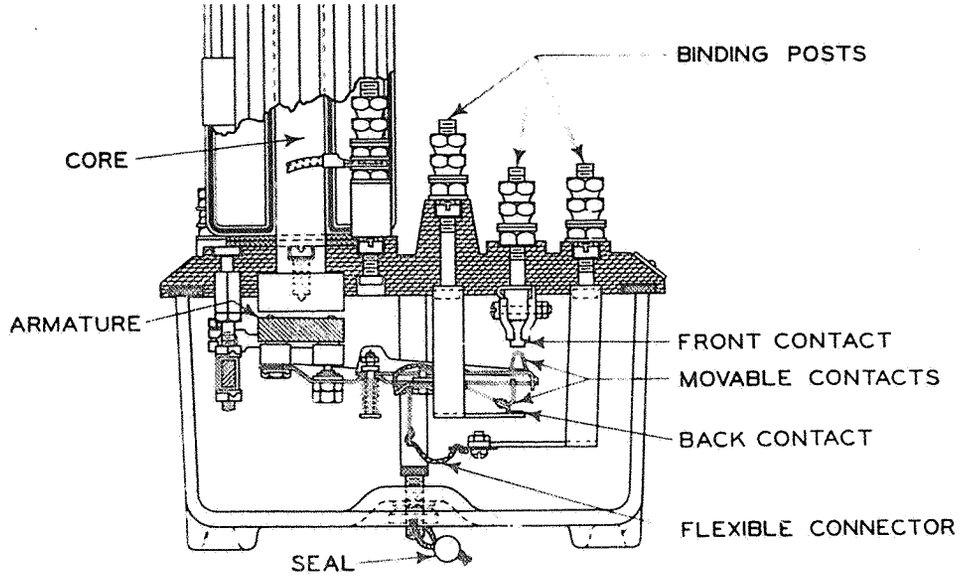

Fig. 3.
Cutaway of Type K Relay.

turns of No. 17 gage wire while a 1,000-ohm relay coil will have approximately 13,000 turns of No. 30 gage wire. The insulation on the wire is enamel or other suitable material. The coils are generally connected in series, the ends of the wires terminating on binding posts to which the control wires may be attached. Each coil, therefore, contains one-half the specified resistance of the relay; that is, in a 4-ohm relay each coil has a resistance of 2 ohms, while in a 1,000-ohm relay each coil has a resistance of 500 ohms. In some cases the coils are connected in parallel and the resistance, then, of each coil is double the specified resistance of the relay; that is, in a 1-ohm relay each coil has a resistance of 2 ohms.

Each coil is so constructed that it may be removed and replaced without changing the magnetic or mechanical adjustment of the relay, and is secured in place to minimize movement from vibration. They are impregnated or otherwise treated so as to satisfactorily protect the coil from moisture and mechanical injury under all service conditions.

Cores.

The coils are assembled on cores. The cores are made of specially selected iron or steel very easily magnetized, but which has low retention of magnetism when the magnetizing force is removed. The cores extend beyond the top and bottom of the coils. At the top of the two cores is a specially selected iron or steel yoke, or yokes, known as the back strap, or straps, securely fastened to each core by a bolt or screw. The bottom of each core is constructed with a specially selected large iron or steel block known as the pole piece or face.

From the study that has previously been made of magnetism, it will be remembered that the coils are so arranged that when current flows through the turns of wire it will produce a north magnetic pole in one pole piece and a south magnetic pole in the other pole piece. To complete this magnetic circuit, the movable part of the relay, the armature, is placed across the pole pieces.

free to be moved when under the influence of the magnetic circuit. When the circuit through the coils of a relay is closed, it sets up a magnetic field of flux through the cores, yoke and armature. As the armature is free to move, it will be attracted to the pole pieces and remain there as long as the circuit through the coils is closed. When the circuit is opened, the magnetic flux collapses and the armature drops away by gravity from the pole pieces to a stop provided for that purpose.

Air gap.

In order to maintain a predetermined minimum air gap between the armature and the pole pieces, the armature is provided with non-magnetic stop pins. The armature usually has main stop pins and safety stop pins fastened securely to it. The main top pins may engage fixed stops located between the pole pieces, be embedded in one of the pole pieces, or engage the surface of a pole piece. The safety stop pins are shorter than the main stop pins and do not normally establish the air gap. The bracket in which the armature is pivoted is made adjustable to permit proper setting of the air gap and means are provided to securely lock the bracket in its adjusted position.

The main stop pins maintain the established air gap to prevent low values of magnetism from keeping the armature attracted or "picked up." Without these stop pins the armature could come in direct contact with the pole faces and a small amount of residual magnetism would be sufficient to hold up the armature. The amount of opening to be maintained in this magnetic air gap is dependent on the operating characteristics desired, the dimensions of and the kind of material in the magnetic circuit, the weight of the armature, etc.

Contacts.

Operated by the armature, but thoroughly insulated therefrom, are metallic springs or fingers, the front ends of which are equipped with contacting surfaces. These contacting surfaces are metal, silver impregnated carbon, or similar composition, depending on the type of relay and service in which they are to be used. Relay contacts are designed for two voltage ranges, that is, 30 volts or less, and 30 to and including 175 volts.

Contacts are so arranged that circuits may be completed with the relay energized or de-energized. Those contacts arranged to close a circuit when the relay is energized are called "FRONT (F) contacts" and when the relay is de-energized, "BACK (B) contacts." Figure 4 illustrates these contact arrangements for a neutral relay. If they have a common heel or movable contact

INDEPENDENT FRONT CONTACT

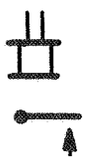

INDEPENDENT BACK CONTACT

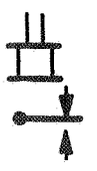

DEPENDENT FRONT AND BACK CONTACT

Fig. 4.

jecting through the top of the relay. This flexible connector or conductor is formed and attached so that it will not affect the torque of the armature.

Neutral relays are available in various sizes, with a maximum number of contact fingers of 2, 4, 6, 8 or 10.

Binding posts.

Binding posts are made of copper or nickel base alloys, and are so constructed that they cannot be turned in the frame to which they are attached. Binding posts supporting the fixed parts of front and back contacts are fastened in their supports so that adjustments of any kind cannot be made without first breaking the seal of the relay. The end of the binding post that makes contact with the contact springs connected to the armature is of metal, usually silver, metal-impregnated carbon or similar compositions, while the other end is a terminal to which the outside wires or circuits are fastened by terminal nuts.

Circuits are controlled through these relays by attaching wires to the proper binding posts; the circuit is closed or opened when the armature is picked up or dropped away, as the case may be. These circuits are easily traced through the relay by following from the binding post to contact spring, to flexible connector, to binding post. The relays are constructed to accommodate different combinations of contacts and the arrangement of contacts and binding posts is usually indicated by a diagram on the name plate, as shown in Fig. 5.

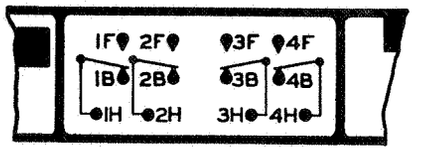

Fig. 5.

Relay supports.

To minimize the effects of vibration caused by trains which might result in back contacts opening while a relay is de-energized, relays are generally spring supported or spring mounted. These springs may be used with all shelf and wall type relays subjected to vibration.

Polarized Relays

The Signal Section, A.A.R., defines Polarized Relay as: A neutral relay equipped with polar armatures and contacts.

The same general construction is followed in the polarized relay, Fig. 6, as in the neutral relay with the following additions: A permanent magnet similar in shape and appearance to the core of the neutral relay is installed in the rear or in front of the two relay coils. One end of this permanent magnet is in contact with the yoke; the other end is so placed as to operate a polar armature alternately against the two neutral pole pieces. This permanent magnet and polar armature has the appearance of an inverted "T," the head being one pole and the bottom of the stem the other pole. The polar armature is suitably supported and is free to move toward either neutral pole piece. Contacts are connected to either end of this polar armature, which in turn are connected to binding posts, closing or opening circuits, depending on the position of the polar armature.

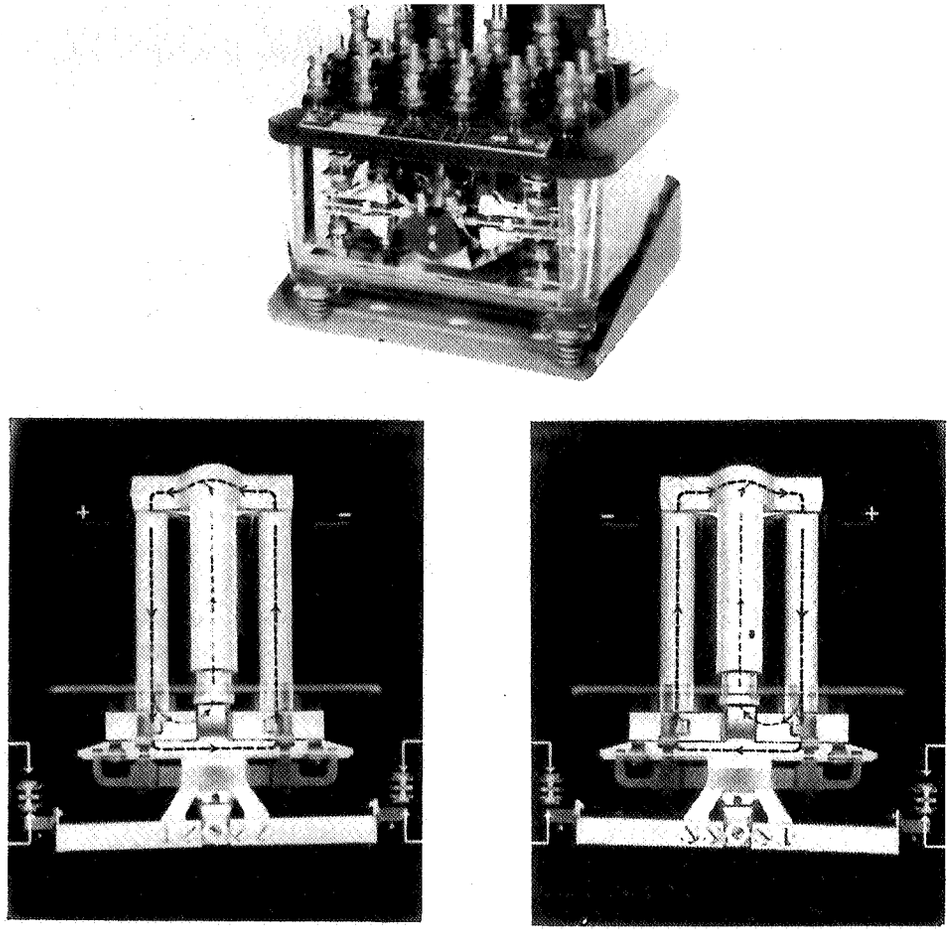

Fig. 6.
Polarized Relay.

Figure 7 illustrates the contact arrangement of a polarized relay. The polar contacts shift their position whenever the polarity of the circuit through the coils is reversed. The arrangement of contacts and binding posts is usually indicated by a diagram on the name plate.

As mentioned under neutral relays, current flowing through the coils of the relay make one of the pole pieces a south and the other a north magnetic pole.

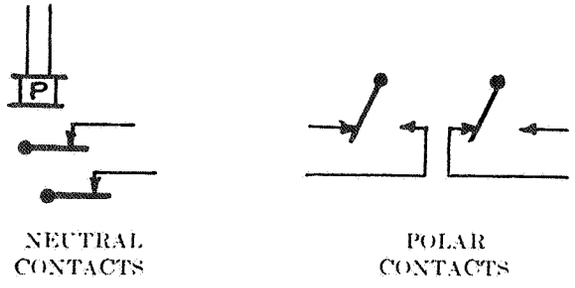

Fig. 7.

polar armature being pivoted in the center will cause the polar contacts to move, closing one set of contacts and opening those on the opposite side.

By reversing the flow of current through the coils of the relay, the neutral pole pieces will change to the opposite magnetic poles. During this action the neutral contacts will open and again close. As the polar armature still retains the same pole relationship there will be attraction where previously there was repulsion and repulsion where there was attraction, causing the polar armature to move in the opposite direction, closing the polar contacts that were opened and opening those that were closed.

Some polarized relays have a special feature in which there exists a positive check that the polar armature agrees in position with the polarity of energy on the main coils before it is possible for the neutral armature to pick up.

This is accomplished by an arrangement of hold-down pole pieces which take the flux from the main cores to the bottom of the neutral armature. This effectively prevents the pick-up of the armature until the hold-down flux is neutralized by locally energized coils in the hold-down magnetic circuit. The neutralizing coil energization is pole changed by contacts on the polar armature so that, if the polar armature is in the proper position as determined by the polarity of energization on the main coils, the neutralizing coils produce flux in the hold-down circuit in opposition to that from the main coils allowing the neutral armature to pick up. If the polar armature fails to reverse to its proper position the flux from the neutralizing coils helps the flux from the main coils to hold the neutral armature from picking up.

Retained Neutral Polarized Relays

The Signal Section, A.A.R., defines Retained Neutral Polarized Relay as: A polarized relay, the neutral armature of which is retained in the energized position for a predetermined interval of open circuit during the reversal of current in the control coils.

Figure 8 shows two relays of this type.

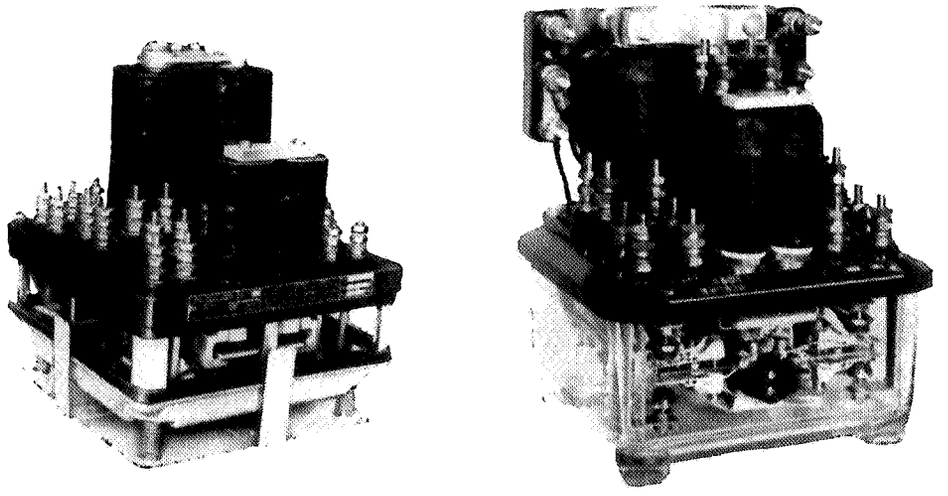

Fig. 8.
Retained Neutral Polarized Relays.

posed of two parts: the main relay coil S and core structure toward the back of the relay, that act upon the main armature M; and the retaining coil A and core structure, toward the front of the relay, that act upon the retaining armature B which is attached to the main armature M by means of a non-magnetic extension D. The coils S on the main structure are composed of a primary and a secondary winding. The primary is the controlling winding for the relay. The secondary winding is connected to the coils A on the retaining structure.

Under normal conditions, with primary winding S energized, a flux is produced which acts upon the main armature M, to maintain it in the picked-up position. However, during pole change, an action takes place as follows: Since the secondary winding is inductively coupled to the primary winding, a voltage is induced in the secondary when the primary circuit is opened. Because the secondary is directly connected to the retaining coils A, this induced voltage produces a current in the retaining coils A, which in turn produces a flux acting upon the retaining armature B. As this is mechanically connected to the main armature M, it causes the main armature M to hold its picked-up position during the reversal of the polar armature. When the primary circuit is again closed with the opposite polarity, a further induced voltage is produced in the secondary winding with the same polarity as that produced when the primary winding was opened. This further strengthens the magnetic field acting on the retaining armature B. Then, when the current in the main winding S reaches its maximum, the current in the secondary decays to zero and the relay is maintained picked-up by its main armature M alone.

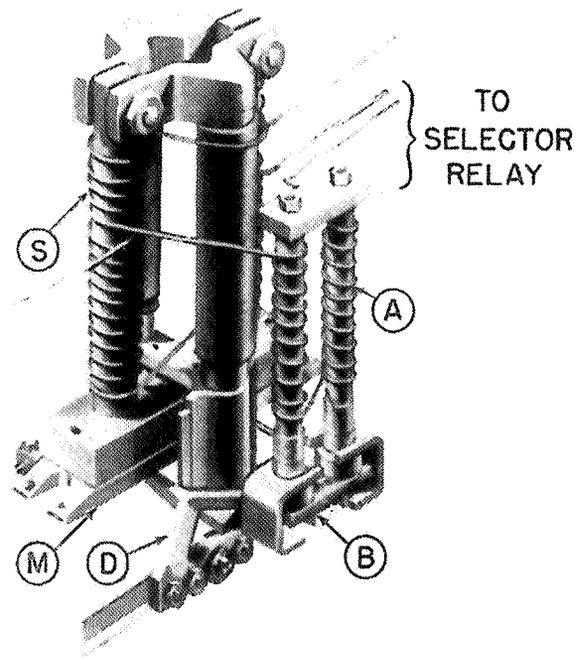

Fig. 9.
Magnetic Structure of a Retained Neutral Polarized Relay.

The Signal Section, A.A.R., defines Quick Drop-Away Relay as a relay which, when the controlling circuit is opened or completely shunted, will release quicker than a regular neutral relay.

For certain conditions it is desirable to use a track relay that will release more quickly when shunted than the regular neutral type of direct current track relay and for this purpose certain modifications are made in the relays previously described.

The quick drop-away track relay is practically the same in all mechanical features as the regular neutral relay except that the yoke (or back strap) is separated from the cores by means of copper ferrules and very thin non-magnetic washers. These ferrules and washers, by introducing an additional air gap in the magnetic circuit, increase the pick-up and drop-away values approximately 50 or 60 per cent, respectively.

Figure 10 shows the core structure of a relay of this type with the ferrules and washers.

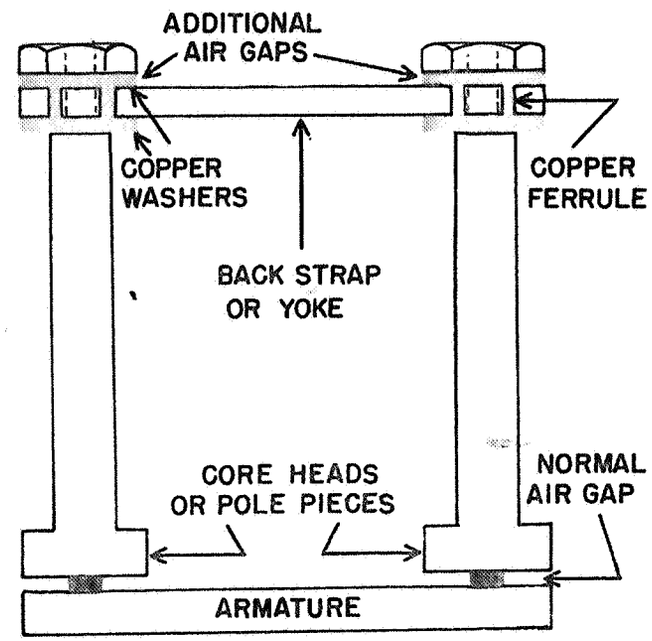

Fig. 10.
Core Structure of a Quick Drop-Away Relay.

Other means are employed to give a quick drop-away, depending on the type of relay involved and the conditions to be met. One such method of obtaining the quick drop-away feature for track relays, which is in common use today, utilizes a standard track relay with an external adjustable resistor in series with the relay coils. This arrangement also provides improved shunting sensitivity due to the higher inter-rail potential.

are used. These relays likewise have the same general mechanical characteristics as the regular neutral relays, except that the coils are wound over a heavy section copper tubing, or a portion of the winding is replaced by heavy copper cylinders to provide an inductive means to retard the decreasing flux in the magnetic circuit. The air gap between the armature and the pole pieces is also materially reduced where excessive delay is required, the idea being to decrease the reluctance of the magnetic circuit and provide sufficient flux for retardation purposes. The main purpose of this relay is to permit a circuit to be controlled through its contacts during the open-circuit period of the relay control circuits. This retardation period is the time interval from the opening of the relay circuit to the opening of the front contacts and is usually from 25 to 50 times longer than with the regular neutral relay, depending on circuit requirements.

The resistance of these slow drop-away relays is generally about one-half that of the regular neutral relay for a given voltage operation in order that twice the amount of current will flow through the coils thereby increasing the flux in the magnetic circuit to more nearly the saturation point and also on account of the limited winding space for the coils. To obtain proper retardation it is essential that the working voltage be maintained at normal or above, as a slight decrease in voltage may cause a material reduction in the retarding effect of the relay.

Figure 11 shows one type of slow drop-away relay with its three copper cylinders and small operating coil.

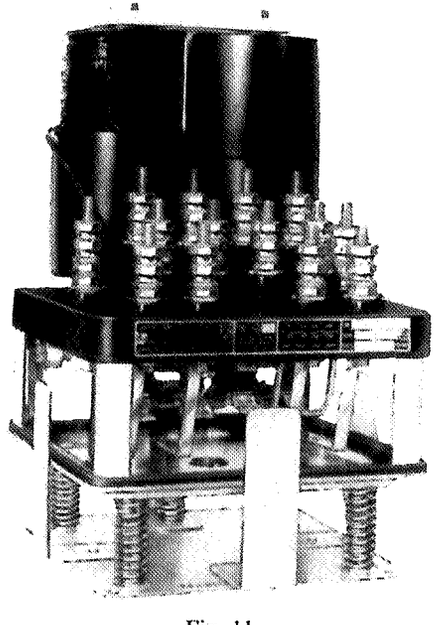

Fig. 11.
Slow Drop-Away Relay.

To provide a small amount of retardation of regular neutral relays, the coils are sometimes short-circuited through the back contact of the controlling relay, or through a special rectifier connected across the coils. Further re-

quickly as the regular neutral relay and for this purpose slow pick-up relays are used. These relays have the same general mechanical characteristics as the regular neutral relay, except that a steel shunt is placed across the cores immediately above the bakelite top plate to shunt part of the magnetic flux from the armature. Normally, these relays will have a slow pick-up time of approximately 1 second and regular drop-away time.

Figure 12 shows the steel magnetic shunt as applied to one type of slow pick-up relay.

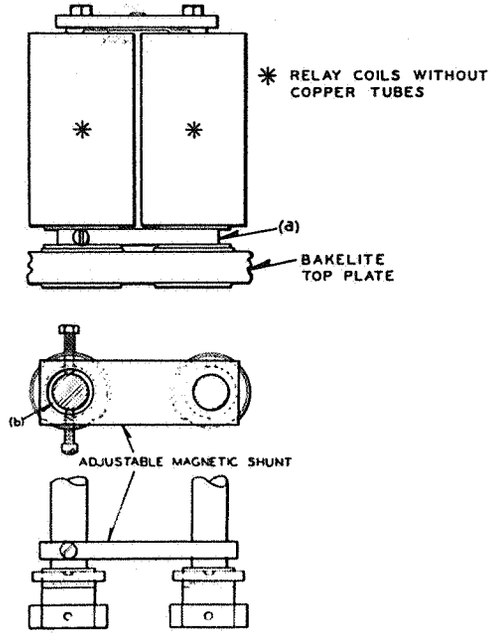

Fig. 12.

Where it is desired to have a relay with both slow drop-away and slow pick-up characteristics, it may be obtained by combining the design features of the two slow-acting relays just described.

Time Element Relays

The Signal Section, A.A.R., defines Time Element Relay as: A relay which will not close its front contacts or open its back contacts, or both, until the expiration of a definite time interval after the relay has been energized.

There are three general types: electromagnetic, thermal and motor-operated.

Electromagnetic type.

A time element relay of the electromagnetic type is shown in Fig. 13.

This relay has two operating coils, and is available with four different time ranges covering all requirements from 5 seconds to 24 minutes. The time interval is obtained by the oscillating motion of the oscillating armature, which is converted to a rotary motion by means of a ratchet wheel and pawl which drive a set of planetary gears. The planetary gears are so arranged that when

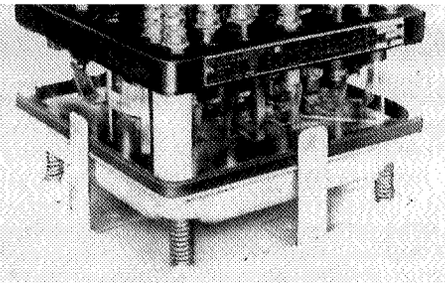

Fig. 13.
Electromagnetic Type Time Element Relay.

power is applied to the relay a part of the main flux is used to operate a clutch armature which engages the stationary gear of the planetary system. The operation of the clutch armature permits the remainder of the planetary system to rotate about the stationary gear until it closes a contact which energizes the auxiliary coils and permits the neutral armature to pick up. It will be observed that the main armature is held down during the timing operation of the relay by the magnetic circuit on which the neutralizing coils are mounted. When the pick-up of the neutral armature occurs, auxiliary contacts are opened, stopping the action of the oscillating armature.

The planetary gear is so arranged that when energy is taken off the relay the clutch armature holding the stationary gear releases and allows the gear train to drop to the normal position. A check contact, closed when the gear train is normal, provides a means of indicating that the relay is in proper condition for the next operation. Due to the design of the check contact it is not to be used for controlling high-voltage circuits, and in case of low-voltage circuits it should be used to control only high-resistance relays. A description of the operation of this relay, making reference to diagrams, Figs. 14 to 16, inclusive, follows:

Figure 14 shows a top view arrangement of the coils and relative positions of the neutral, clutch and oscillating armatures.

Figure 15 shows a schematic view of the magnetic circuits which will be of assistance when considering the following description.

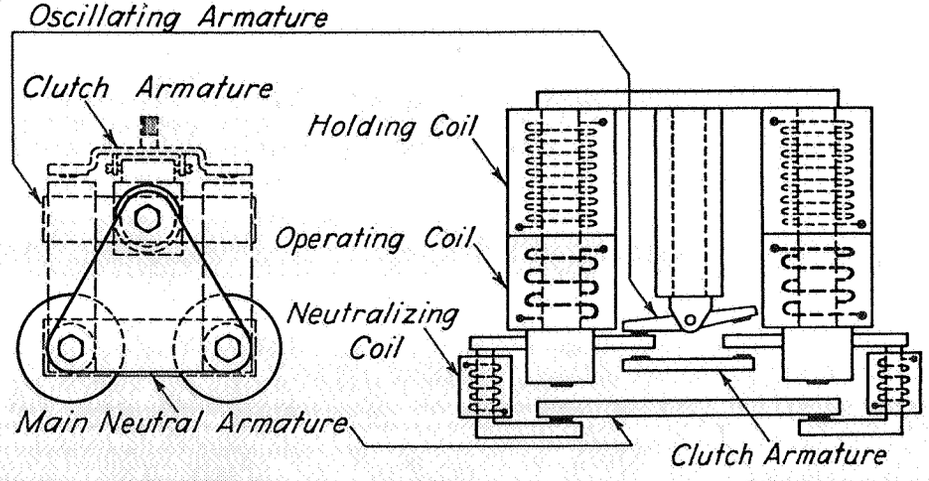

Fig. 14 Fig. 15

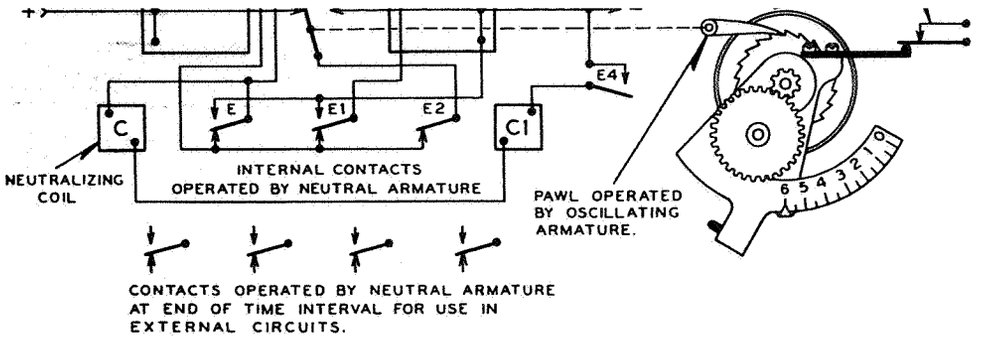

Fig. 16.

Figure 16 shows the internal wiring of this relay and, schematically, the advancement of the planetary gear. When positive energy is applied to the relay control circuit, current flows through oscillating contact E5, back contacts E2 and E1, and low resistance operating coil of core B to negative energy. The low resistance operating coil of core A is shunted at this time by a circuit through contacts E5 and E2. The oscillating armature is then pulled up against the pole face of core B, whereupon contact E5 is opened and E3 is closed. Operating coil B is then shunted by a circuit through contacts E3, E2 and E1, and the shunt is removed from coil A. Energy is then applied to operating coil A by the circuit from positive energy over contacts E2 and E3 to negative which will pull the oscillating armature back to its initial position. An oscillating motion of this armature thus is set in motion.

When energy is supplied to the operating coils of the relay, the clutch armature is pulled up against its pole faces and an arm on it comes into contact with the stationary gear member of the planetary gear, thus allowing the ratchet operated by the oscillating armature to move the timing contact around step by step until ultimately contact E4 is closed.

During the operation of the relay, the holding coils on cores A and B are shunted by back contact E. This shunt along with copper washers on the third core and the alternate shunting of operating coils A and B regulates the frequency of oscillation as in a flasher relay.

The main neutral armature, during the foregoing operation, is held down by the magnetic flux which flows in the pole pieces projecting under it as explained previously. When contact E4 is closed after the expiration of the time element, current flows from positive energy through contact E5, back contacts E2 and E, neutralizing coils C and C1, and contact E4 to negative energy. This energizes coils C and C1, causing them to introduce a flux which neutralizes that holding the neutral armature down, and permits the main flux through the top pole faces of cores A and B to attract the neutral armature. This opens back contacts E, E1 and E2, and closes front contacts E and E1. The operating coil on core B is thus shunted by contact E1. The shunt on the high-resistance holding coils of cores A and B is removed by the opening of back contact E and the holding circuit is as follows: positive energy through low resistance coil A, holding coils on cores A and B, and front contact E to negative energy.

Upon energy being removed from the relay coils, the clutch and neutral armatures both release, and the contacts and planetary gear combination re-

core B through front contact B1.

Figure 17 shows the adjusting key in position to adjust the time setting. The adjustment is held by the teeth on the locking spring engaging the teeth of the locking pinion. After the time has been adjusted, the key and cap assembly are removed, the key inverted, and the assembly returned to its position where it must be sealed.

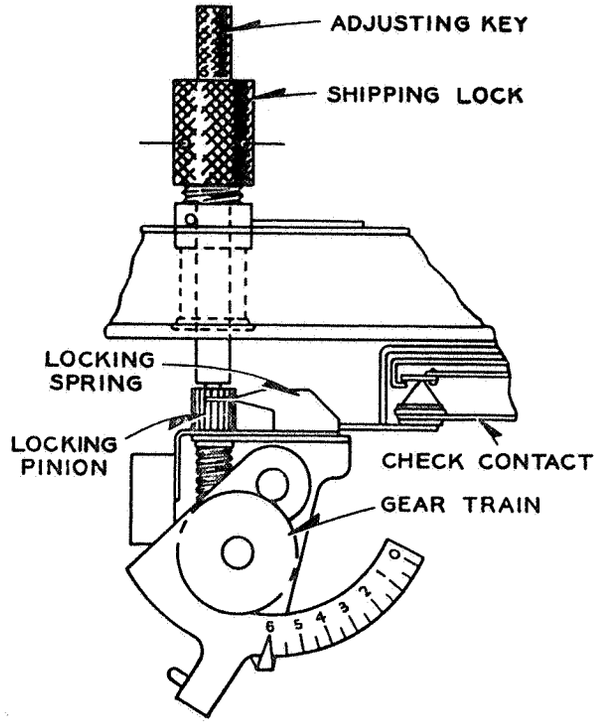

Fig. 17.
Application of Adjusting Key and Shipping Lock.

Motor-operated type.

Figure 18 illustrates a time element relay of the motor-operated type.

This type of time element relay, like the electromagnetic type, is applicable in approach timing at interlockings, outlying switch locations where required, automatic interlockings, highway crossing protection locations or any other application where accurate, dependable timing is required.

The motor-operated timing relay is of simple construction, consisting of a constant speed motor with enclosed gear train, a pair of holding coils and a calibrated timing gear wheel with a check and a timing contact.

The time calibration ranges for this type of relay are from 4 seconds to 64 seconds, 1 minute to 8 minutes, 2 minutes to 16 minutes, at operating d.c. voltages of either 8, 10 or 12 volts.

Figure 19 shows the operating diagram for this type of relay, the operation of which is as follows:

Energization of controls starts the constant-speed motor, energizes the holding coils, and picks up the armature. This connects the motor, through a gear train, pinion, and intermediate gear, to the calibrated timing gear wheel. This wheel carries two contact arms, one which, as the wheel begins to rotate, opens

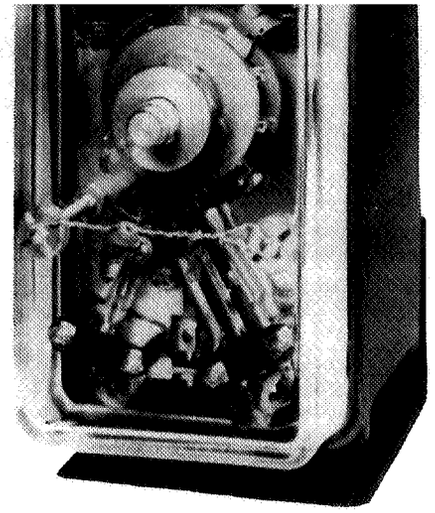

Fig. 18.
Motor-Operated Type Time Element Relay.

the check contact and the other which, when the full operating time has elapsed, closes the timing contact and opens the motor contact.

The timing gear wheel remains in the full-time elapsed position (with timing contact closed), until de-energization.

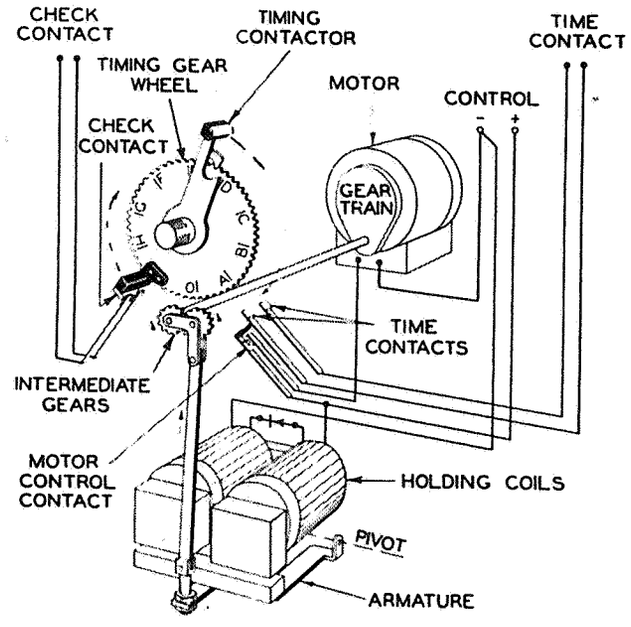

Fig. 19.

Upon de-energization, the armature drops and disengages the intermediate gear from the timing gear wheel, permitting it (the timing gear wheel) to restore to normal, opening the timing contact and closing the motor contact and the check contact. A time delay is imposed on the drop-away of the armature

Positive armature drop-away and consequent disengaging of the intermediate gear from the timing gear wheel at time of relay de-energization is assured by the adequate dead-weight armature torque that is provided. The timing gear wheel is returned to its normal position and held there by means of a spiral-coiled spring. To prevent rebound and consequent reopening of the check contact at time of being made, a mechanical snub is provided.

The time settings are obtained by the positioning of the movable portion of the timing contactor in the following manner:

The circumference of the calibrated timing gear wheel is provided with gear teeth which are engaged by the intermediate gear when the holding coils are energized. It is through this engagement that the timing motor drive is transmitted to the check and timing contacts. The greater the distance the intermediate gear has to travel along the circumference of this wheel, the greater the length of operating time before the timing contact closes. Hence, adjusting the position of the movable portion of the timing contactor along the circumference of the timing gear wheel shortens or lengthens this distance and correspondingly decreases or increases the operating time.

The contactor is solidly attached to, but insulated from, the timing gear wheel. As the check contact opens slowly, it is not to be used for interrupting high-voltage circuits, and in the case of low-voltage circuits it should not be used to open circuits carrying more than 0.5 ampere.

The calibrations are clearly visible through the transparent cover.

Thermal type.

The Signal Section, A.A.R., defines Thermal Relay as: A timing relay whose contacts are actuated by the heating effect of current flowing through its controlling element.

Figure 20 shows a relay of this type. The principle of operation of the relay consists of heating the main contact finger which is made of two strips of different metals having different coefficients of expansion bonded together.

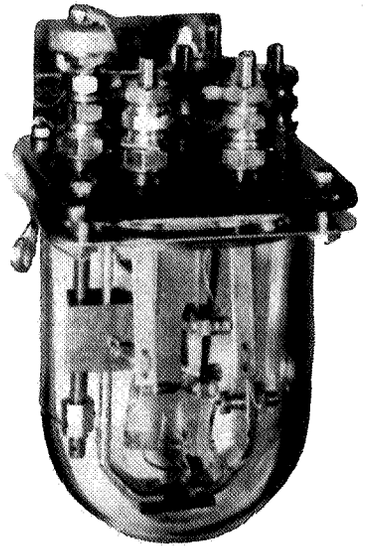

Fig. 20.
Thermal Relay

ranges: the short time relay, which is adjustable from 15 to 45 seconds, and the long time relay, adjustable from 45 seconds to 2½ minutes, total operating time.

Thermal relays may be operated from direct or alternating currents of suitable voltage, the power consumed by the heater coil being approximately 10 watts. Where accuracy in duplication of a definite time interval in repetitive operations is required (without allowing time for the heating element to cool), time element relays of the thermal type are not recommended.

A simple application of a thermal relay to automatically release approach locking is illustrated in Fig. 21, and its operation is as follows:

The path of current to operate the thermal relay, with all signals at stop and train in the approach track section, is from positive energy B through the heating element around the contact finger (a) and through a back contact of

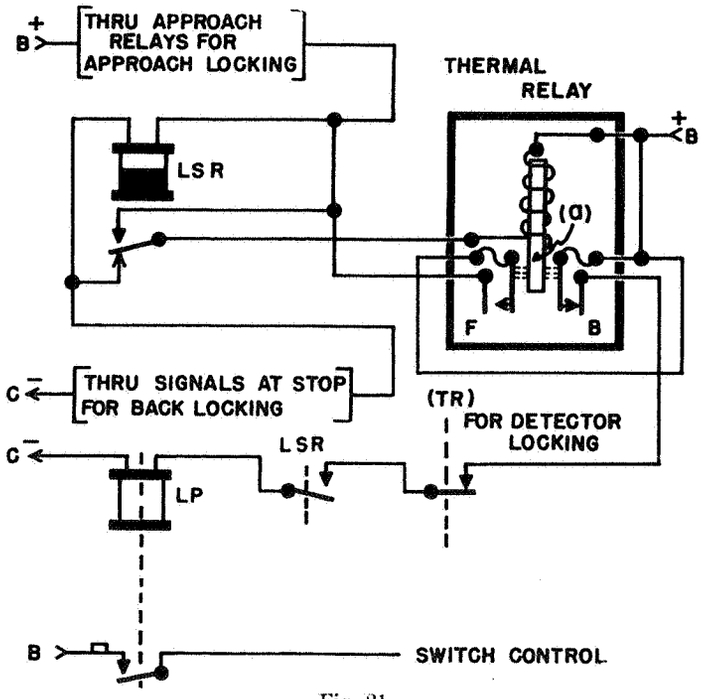

Fig. 21.

relay LSR and the signals at stop to negative energy C. When the left or front contact of the thermal relay closes in the predetermined time, relay LSR is energized and remains energized through its own front contact, and through the heating element from positive energy B. The coils of relay LSR, now being in series with the heating element circuit, reduce the current flow through the heating element sufficiently to allow the heating element to cool, thereby opening the front or left contact and closing the right or back contact. By controlling relay LP through the right or back contact, operation of switch control is prevented until the thermal relay has functioned and returned to normal. Therefore, in this application, the time of operation of the thermal relay is the total time from the instant that current is applied to the instant that the normally closed contact again closes after the movable finger has passed across

signals. They are designed to give approximately 40 operations per minute for crossing signals and 55 for wayside signals. One type of relay used for flashing crossing signals is shown in Fig. 22.

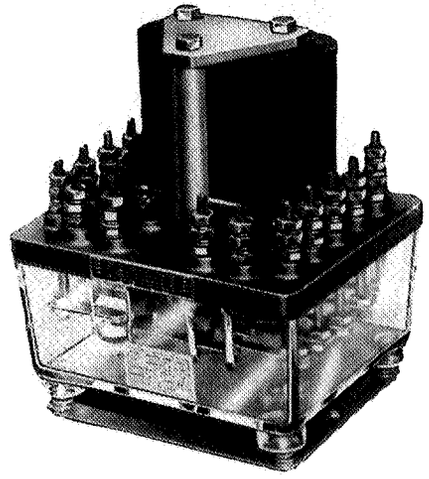

Fig. 22.
Flasher Relay.

Figure 23 is a schematic diagram of the magnetic structure and operating circuit of a flasher relay used for crossing signals.

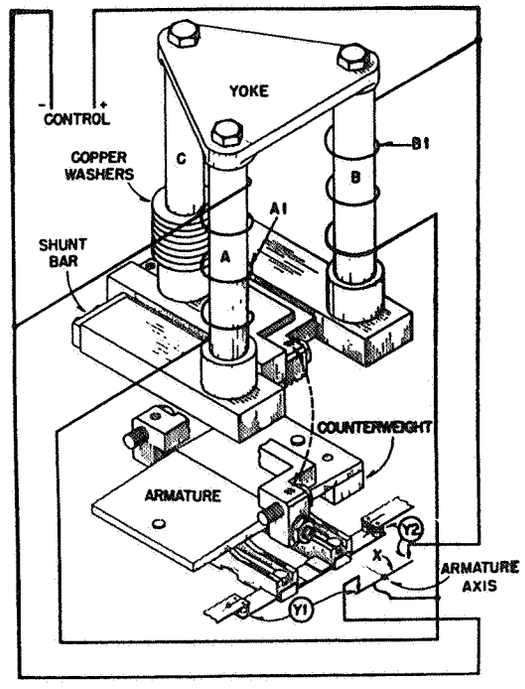

Fig. 23.

It will be observed that core C serves as a common path for the flux produced alternately by relay coils A1 and B1. The armature is centrally pivoted so

sets up a flux in the magnetic circuit comprising core B, yoke or back strap, common core C, and the armature. This results in the armature being attracted to the pole piece of core B, thereby opening contact Y1 and closing contact Y2 to shunt coil B1, instead of coil A1. The resultant current in coil A1 sets up the flux in the magnetic circuit comprising core A, back strap, common core C, and the armature, so that the armature is attracted to the pole piece of core A. Thus, the armature is caused to oscillate and provide the desired timing intervals for flashing of the lamps.

The copper washers on core C tend to retard any change in the flux existing in this core. Likewise the shunting of coils A1 and B1 tend to oppose any change in the flux in cores A and B, respectively. This snubbing action gives the armature of the relay slow-acting characteristics and also avoids the armature stopping in midstroke when contacts Y1 and Y2 are both open.

The rate of oscillation of the relay may be decreased by adding copper washers or increased by removing washers.

The relay illustrated in Fig. 22 gets its slow-acting characteristics by reason of a magnetic shunt between the two main cores of the relay, mounted on the pole piece end of the coils. Adjustment of this shunt controls the rate of oscillation.

Figure 24 shows a schematic diagram of the magnetic structure and operating circuit of another type of relay used for crossing signals.

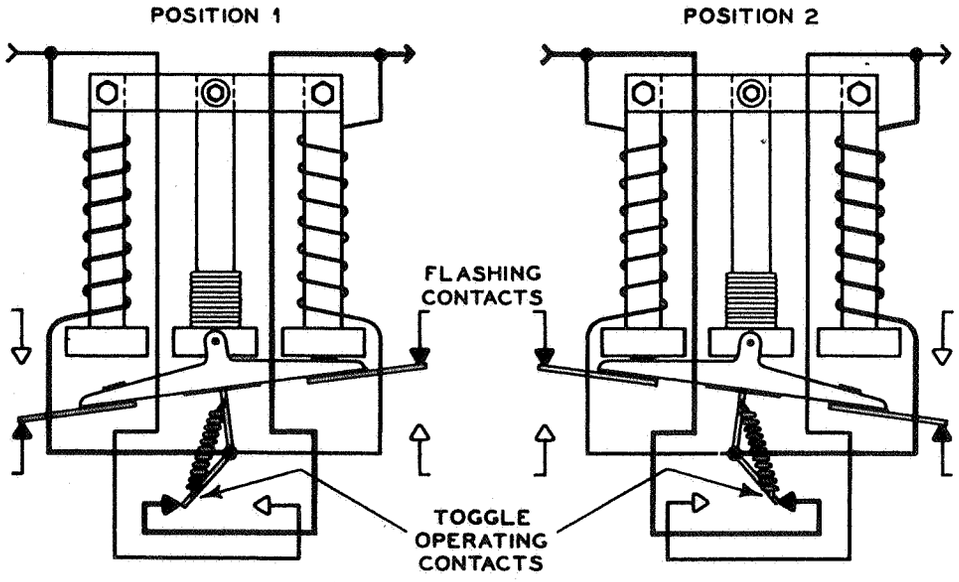

Fig. 24.

When the relay is de-energized, the armature remains in its last energized position. When energy is applied, one coil is energized and the armature moves to the opposite side. As it moves to the opposite side the operating contact shunts one coil which causes the other coil to pull the armature over. The toggle is operated just before completion of stroke and the action is reversed as follows: Toggle contacts now shunt the coil which has just ceased operation, resulting in slow release, at the same time energizing the other coil causing

them, increases the life of the lamp control contacts because they are not required to break as much current, which greatly reduces the arcing and burning and also results in somewhat less radio interference.

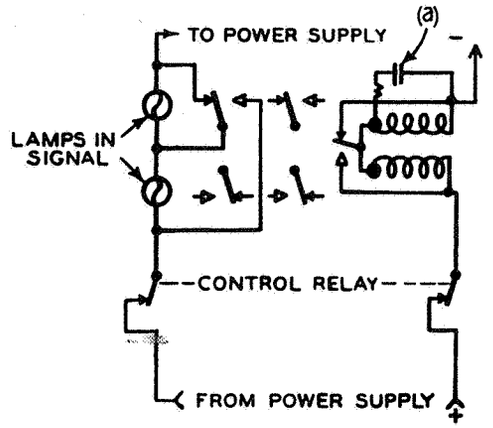

Fig. 25.

Radio interference is eliminated by the addition of a capacitor and resistor, reference (a), connected in parallel with one of the operating coils. This capacitor absorbs the transient phenomena produced by the operation of the control contact as it changes the shunt from one coil to the other. The resistor limits the flow of current when the capacitor is discharging when shunted.

A somewhat more compact relay is used for the flashing aspect of wayside signals. Figure 26 shows one type of this relay.

The magnetic structure comprises two identical main pole pieces, one at each end of the core, and an upright intermediate pole piece at the midpoint of the core. Each end of the core carries one of the control coils and a copper sleeve which serves to slow the rate of operation. The armature is biased to cause the normal contacts to be closed when the relay is de-energized. Temperature compensation is provided and the flashing rate is practically independent of applied voltage. The flashing rate is readily adjustable by means of a built-in externally adjustable magnetic shunt.

Two dependent normal and reverse contacts for controlling signal lamps or other external circuits are provided.

Overload Relays

The Signal Section, A.A.R., defines Overload Relay as: A relay which operates to open contacts when the current through its control coils exceeds a predetermined value.

The principal use of the overload relay is to protect switch motors, contacts, batteries, etc., in the event of overload due to an obstruction in the switch points or a lock rod out of adjustment. It can readily be seen that without such protection, if for any reason the points become stalled during a switch movement, there could be an indefinite drain on the operating battery and damage to contacts in the attendant apparatus.

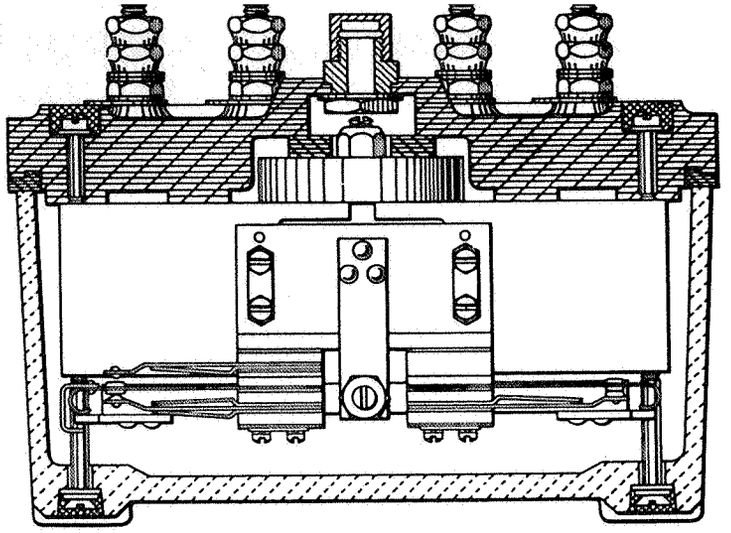

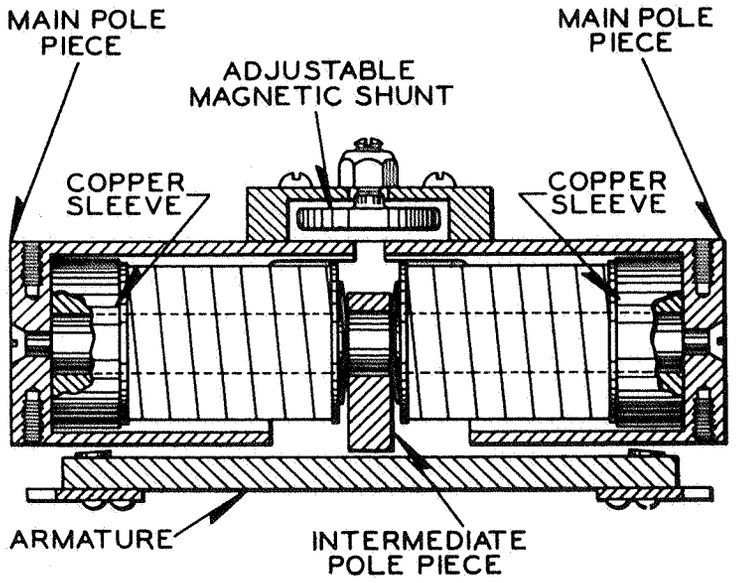

Fig. 26.
Flasher Relay for Wayside Signal Aspect.

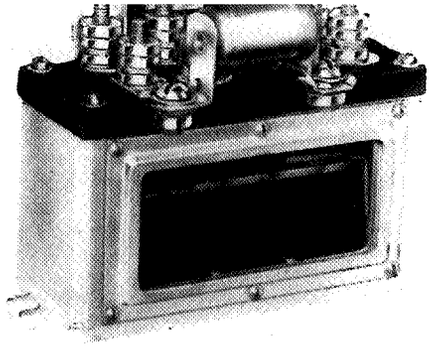

Fig. 27.
Overload Relay.

Referring to Fig. 28, to operate the switch machine to the reverse position, relay WR is pole-changed by its control circuit. The motor current then flows from B24 through neutral heavy duty contact 5F on WR, reverse polar contact 3R, thermal resistor and OR relay operating coil in parallel, thence through the motor armature, polar contact 4R, contact 12 on switch circuit

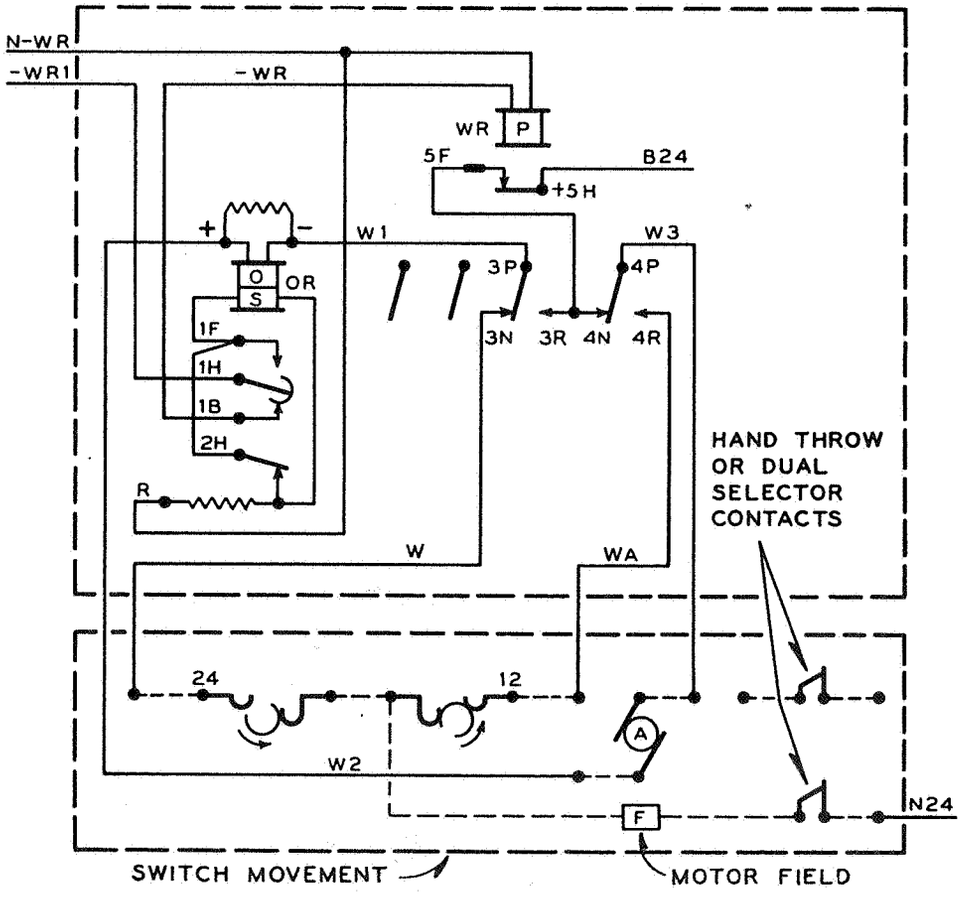

Fig. 28.

result in the resistor heating, and its resultant increase in resistance will cause sufficient current to flow through the operating coil to pick up the relay.

When the overload relay picks up, the control for switch control relay WR is opened at back contact 1B and battery is removed from the motor control circuit at contact 5F on WR. At the same time, the secondary or stick winding S of relay OR becomes energized over front contact 1F of continuity contact on OR which will hold up relay OR and relay WR will remain de-energized until the polarity of the switch control relay circuit is reversed, after which the switch machine will be returned to its normal position. Because of the quick cooling characteristics of the thermal resistor, it is possible to make an immediate attempt to again reverse the switch.

With the clutch of the switch machine adjusted to slip at the recommended current, the overload relay will operate in approximately 5 seconds after the overload occurs. This gives the switch machine time to lock up with a high thrust at the completion of the stroke of the switch points. With the clutch slipping at 75 per cent of recommended current, the relay will operate in approximately 20 to 25 seconds.

Biased Relays

The Signal Section, A.A.R., defines Biased Relay as: A relay which will operate to its energized position by current of one polarity only, and will return to its de-energized position when current is removed.

Figure 29 shows one type of biased relay.

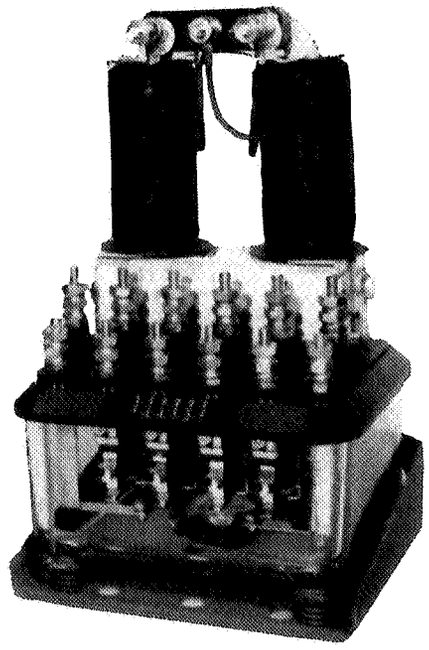

Fig. 29.
Biased Relay.

The biased action of this type of relay is obtained by a permanent magnet arrangement as shown in schematic diagrams, Figs. 30 and 31.

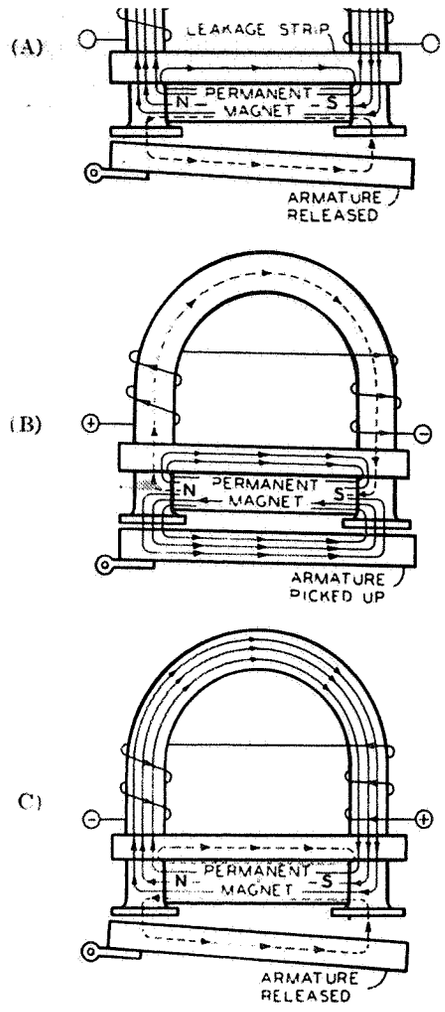

A. No voltage applied. The biased neutral relay is de-energized.
B. Voltage of right polarity applied. The relay armature picks up.
C. Voltage of wrong polarity applied. The relay armature does not pick up.

Fig. 30.

Referring to Fig. 30, illustration A, with the polarity of the permanent magnet as shown and no current flowing through the coils, the major portion of the magnetic flux passes through the parallel paths of low reluctance through the leakage strip and U core or that part of the magnetic circuit usually made up of the two cores and the yoke or back strap. Very little flux goes through the armature because of the high reluctance of the air gap. This armature flux is of such a small value that the armature will drop away from the pole faces by gravity.

Illustration B, Fig. 30, shows a current flow through the coils in such a direction that their magnetomotive force opposes the magnetomotive force of the permanent magnet in the U core. This is the same as creating a high reluctance in the path of the permanent magnetic flux in the U core. This causes

armature will remain picked up as long as the coils are energized. When the coils are de-energized, the coil flux collapses and no magnetomotive force opposes the permanent magnet. The flux of the permanent magnet again follows the low reluctance path through the U core and leakage strip, paths that have lower reluctance than the one through the armature, which causes the armature to drop away from the pole pieces as previously described.

Illustration C, Fig. 30, shows what the effect is in the magnetomotive force structure of the relay when a current of opposite polarity flows through the relay coils. The magnetomotive force created by this opposite polarity aids the magnetomotive force of the permanent magnet by creating an even lower reluctance in the U core than under illustration A, which results in the flux re-

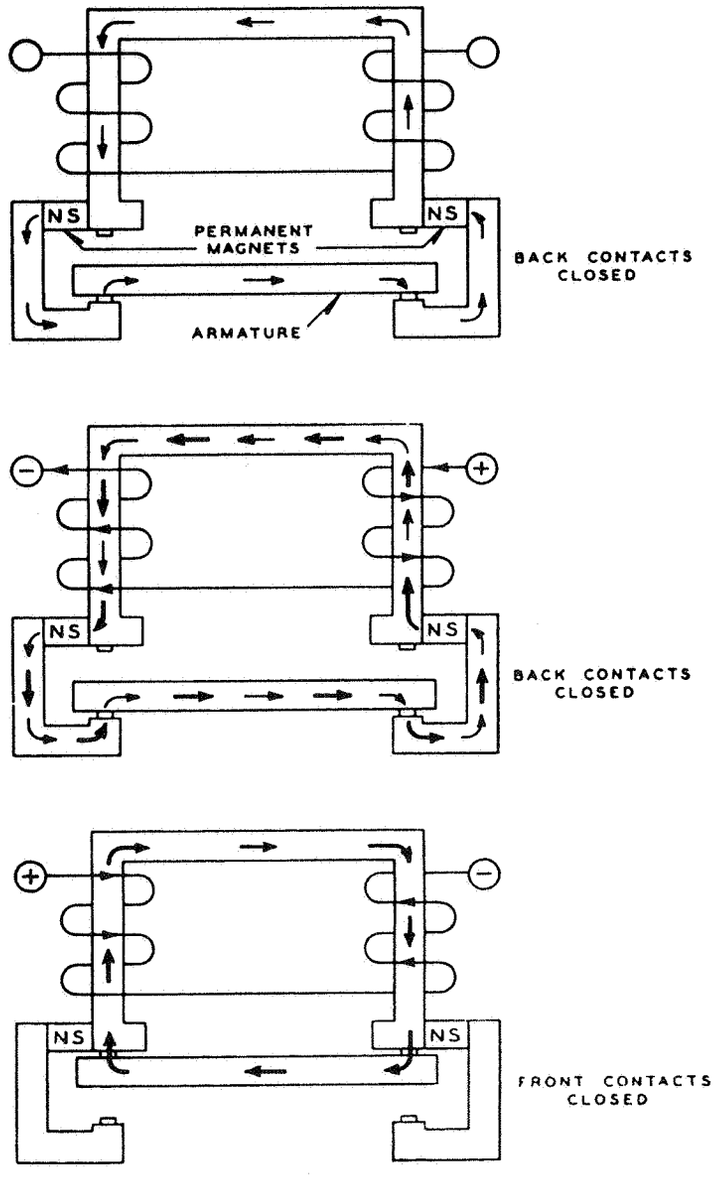

Fig. 31.

armature, it would take at least 4,000 volts applied in the reverse direction to pick up the armature.

Referring to Fig. 31, a slightly different method is used to obtain the bias. Here with the relay in the de-energized position, a part of the permanent magnetic flux passes lengthwise through the armature and exerts on the armature a torque which assists the gravity torque in holding the back contacts closed.

When energy of the polarity as indicated in the diagram is applied to the coils, the flux set up in the armature by the current flowing in the coils will be in opposition to the permanent magnetic flux. As the coil flux builds up, the armature flux builds up, opposing the permanent magnet flux. When it reaches the point where the hold-down effect is neutralized the armature will be permitted to pick up.

If energy of opposite polarity is applied to the coils, the resultant coil flux will pass through the armature in the same direction as the permanent magnetic flux and the armature will remain in the de-energized position.

Biased relays of the two types described are used for both line and track service. As track relays, they provide protection against broken-down insulated joints where the polarity of adjacent track circuits is staggered and they are less susceptible to the effects of foreign current because of response to current of only one polarity. When the biasing feature is applied to a two-point track relay having a relatively large air gap, a relay having quick drop-away, and high drop-away with respect to normal working current, is obtained, Improved shunting sensitivity in addition to the advantages mentioned previously, is also obtained.

They can be used as line relays in polarized signal control circuits such as switch operation, correspondence or repeater circuits, or in any neutral or polarized line circuit where response to one certain polarity is required. They are particularly useful in neutral line circuits for protection against foreign current and as a battery-checking relay where polarized circuits are fed from one section of a split battery and other loads are connected across the whole battery.

Interlocking Relays

The Signal Section, A.A.R., defines Interlocking Relay as: A relay having two independent magnetic circuits with their respective armatures so arranged that the dropping away of either armature prevents the other armature from dropping away to its full stroke.

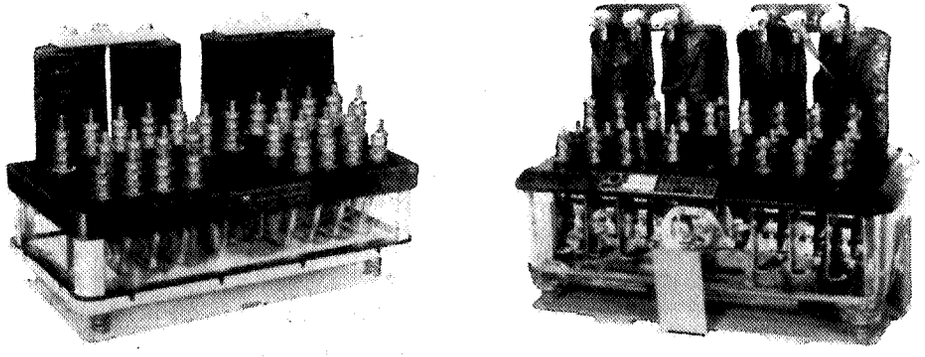

Fig. 32.

that they cannot rest on the back contacts.

Relays of this type are used for the control of railroad-highway grade crossing signals. The coils may receive their energy direct from the track or from line circuits, depending on local conditions.

Figure 33 shows the sequence of operation of one type of interlocking relay, which is as follows:

View 1. Relay is in normal energized position.

View 2. Train enters track circuit on the left, de-energizes the relay coils on that side, closes the back contacts and the armature forces pawl L to the right.

View 3. Train enters track circuit on the right and de-energizes the relay coils on that side. The armature, however, is blocked by pawl R just after the front contacts open and the back contacts cannot close.

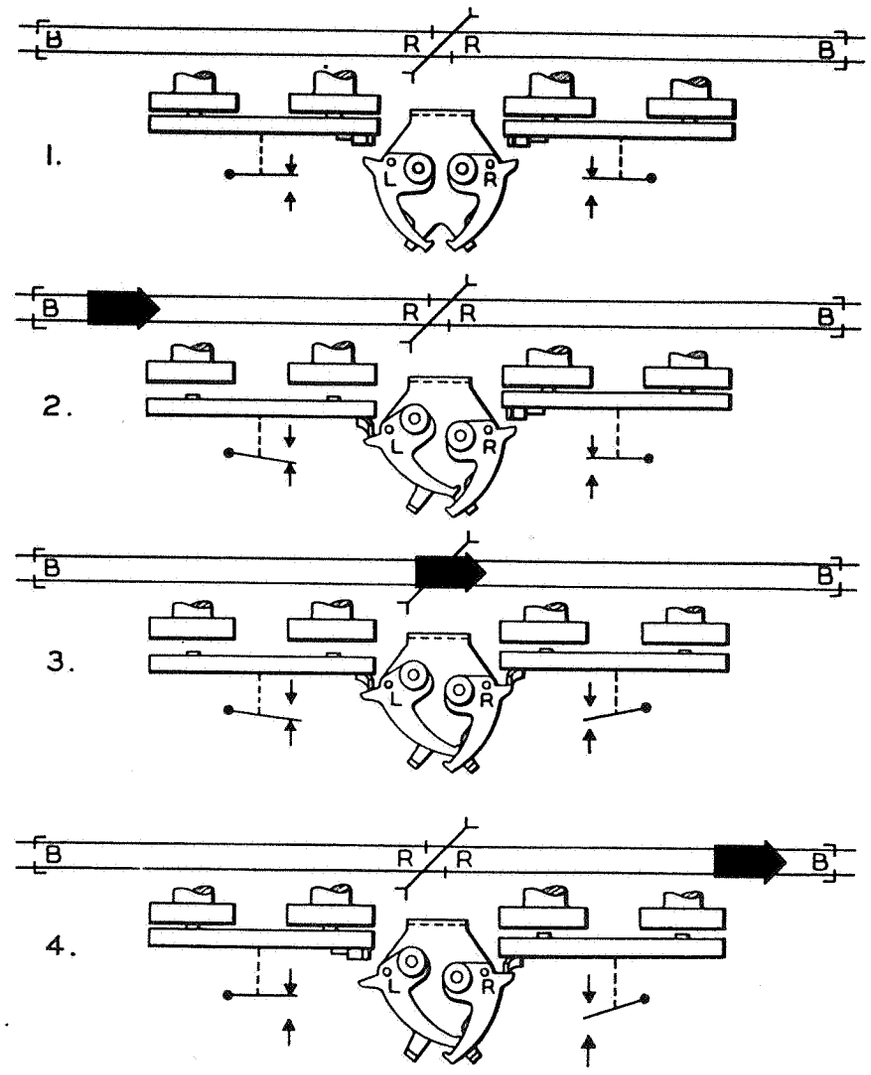

Fig. 33

and the armature on the right picks up, R will move to the right to release L and both pawls will return to their normal position.

Figure 34 shows the mechanical linkage of another interlocking relay.

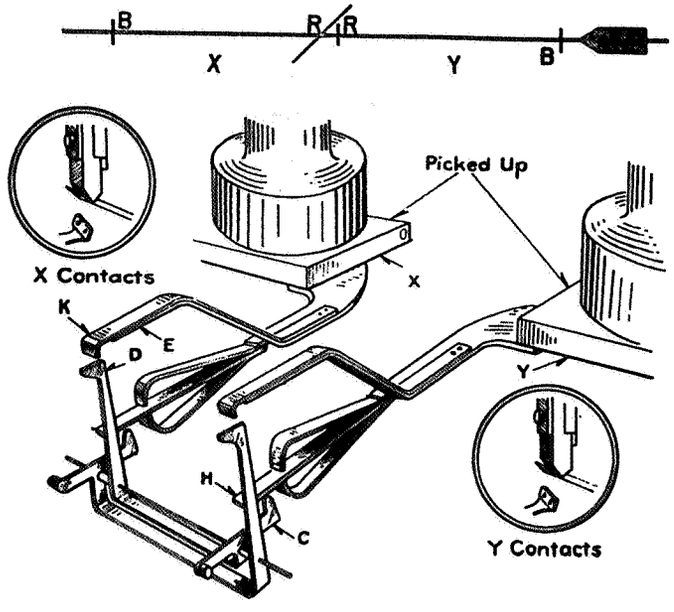

Fig. 34.

Normally both relay armatures X and Y are picked up in the normal position. As a train approaches on track section Y, relay Y is de-energized. When armature Y drops, finger H engages with pawl C, forcing pawl D into the path of finger E, without deflecting finger H any appreciable amount. Contacts on armature Y of the relay function as in the regular neutral relay, that is, the front contacts open and the back contacts close. As the train enters the next track circuit, relay X is de-energized while armature Y is still down. When this occurs, finger E, a stiff member, is stopped in midstroke by pawl D, with the result that front contacts on armature X open and back contacts do not close.

When the train clears track section Y, armature Y picks up but armature X remains in the midstroke position as before because pawl D, engaging finger E, does not move. Any tendency to release pawl D from finger E from vibration is prevented by the hook on the end of spring K.

When the train clears track section X, armature X is picked up in the normal position, releasing pawl D, and restoring relay to normal thereby conditioning relay for the next train movement.

Traffic in the opposite direction causes a sequence of operation identical to that just described except that relay X is de-energized ahead of relay Y.

Interlocking relays may be provided with a special front contact which does not open when the interlocking arm on the interlocking device rests on the locking pawl after it has been moved into the path of engagement with the

locking relays will vary from the foregoing description; however, they all work on the same general principle.

Power Transfer Relays

The Signal Section, A.A.R., defines Power Transfer Relay as: A relay so connected to the normal source of power supply that the failure of such source of power supply causes the load to be transferred to another source of power supply.

Relays of this type are generally used at wayside signals and in railroad-highway grade crossing signal installations to permit use of a.c. power for lighting purposes and to transfer the lighting load to the battery in case of power interruption.

Figure 35 shows two two-point relays of this type. They are also supplied with four and six contacts.

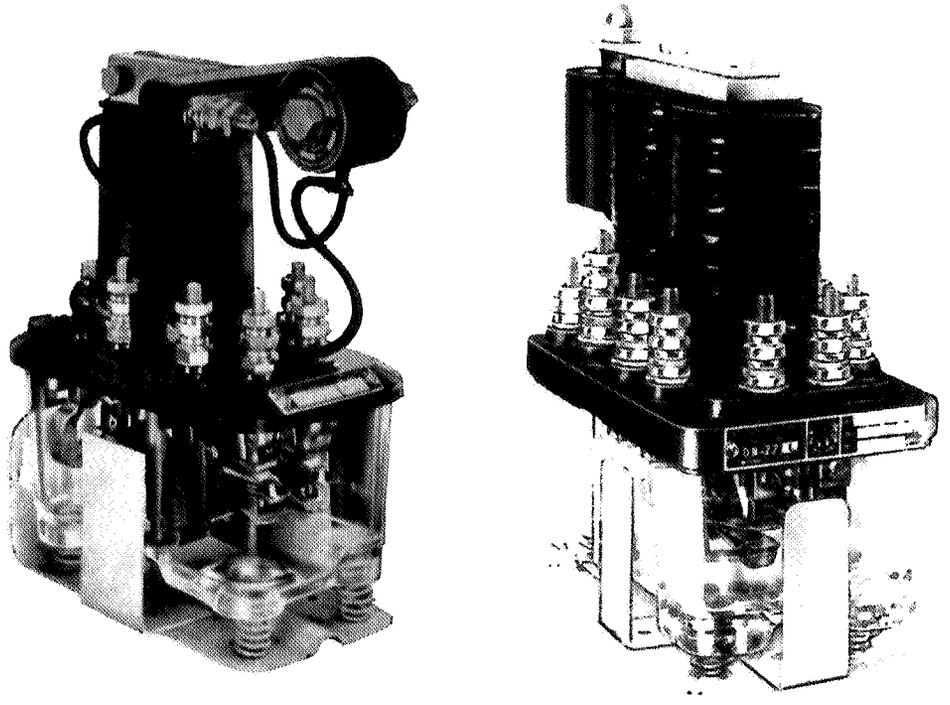

Fig. 35.
Two Types of Power Transfer Relays.

Figure 36 shows typical connections for a two-point power transfer relay.

These are fundamentally d. c. relays arranged to operate from a. c. supply by means of a rectifier which is a part of the relay connected as shown in Fig. 36.

During one-half of each cycle of the alternating current, current flows through one relay coil and that leg of the rectifier in parallel with the second relay coil, while during the second half of each cycle current flows through the second relay coil and that leg of the rectifier in parallel with the first relay coil.

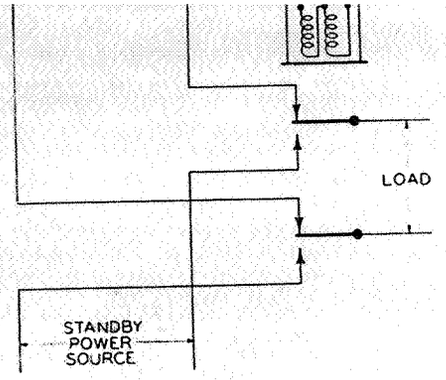

Fig. 36.

As a result of this action, the electromagnetic flux or force acting upon the armature is practically constant.

Some of the special features provided in power transfer relays are as follows:

1. Positive drop-away of the armature when the alternating current voltage has dropped to a predetermined value below the normal voltage. This provides protection against low voltage as well as loss of power.
2. A complete pick-up and drop-away, i.e., the relay will completely release to the de-energized position when the control voltage is reduced to the drop-away value. It will pick up to its full working position when the pick-up value of voltage is reached and will not assume a midway position on either pick-up or drop-away. This will prevent the armature from "floating" or "hanging."

Approach Lighting Relays

The application of electric signal lamps to signals previously equipped with oil lamps and, later, the use of light signals brought about the desire to reduce power consumption by lighting the signals only when there was need for an indication. At many locations, signals could be approach lighted through the track relay in the track circuit in approach to the signal; however, this method was not applicable where the track relay was located at the opposite end of the track circuit from the signal or where the signal came in view of the engineman before the approach track circuit was occupied by the train. To provide approach lighting in such instances, it is possible to use a relay at the signal location in series with a line control circuit extending to the signal in approach to the location. When the approach track circuit is shunted, or by some other means the line control circuit is opened, the series line relay will release and energize the signal lamp. These relays are standard neutral relays, although sometimes of lower power requirements than standard line relays. It will be realized that the operating current of the series relay must be of nearly the same value as that of the normal line relay. The resistances of the two relays plus the line resistance, all corrected for increased resistance due to maximum temperature to be anticipated, must be such as to allow the current to be at least as great as the working current of the relay having the greater value when connected to the battery voltage available.

circuit occupied will cause it to pick up and energize the lighting circuit.

Series relays are not recommended for use where failure to release would set up an unsafe condition.

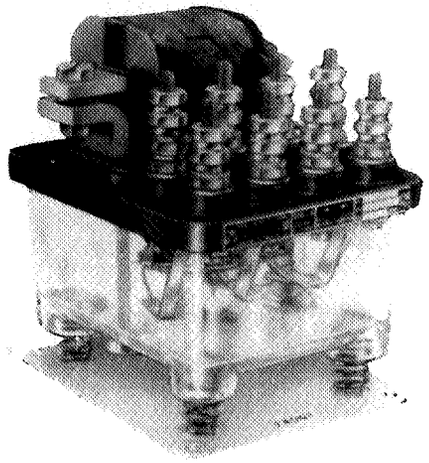

Fig. 37.

Light-Out Relays

A light-out relay is a relay used in series with a signal lamp to check that the lamp filament is intact. Figure 38 shows two types of light-out relays.

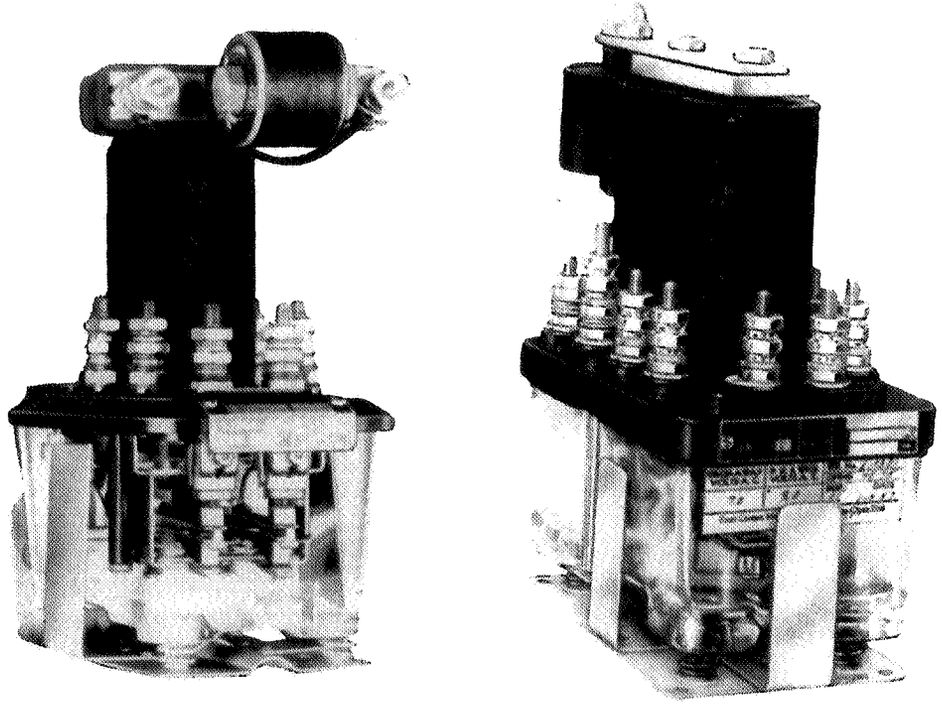

Fig. 38.
Two Types of Light-Out Relays.

tude of the lamp current. Where differential or double filament lamps are used, the operating current is determined by whether the relay must drop out with the main filament (or one of the equal filaments) burned out.

A check that the lamp filament is open is used to provide a more restrictive indication. Its most important function is to make certain that the failure of a lamp will not present a signal aspect that is less restrictive than the one intended. This condition is particularly important where two or more arms are used.

For color light signals with only one signal arm, a light-out relay in series with the green unit lamp if de-energized might light the yellow aspect lamp, as illustrated in the typical circuit shown in Fig. 39. In this illustration the lamp is lighted continuously.

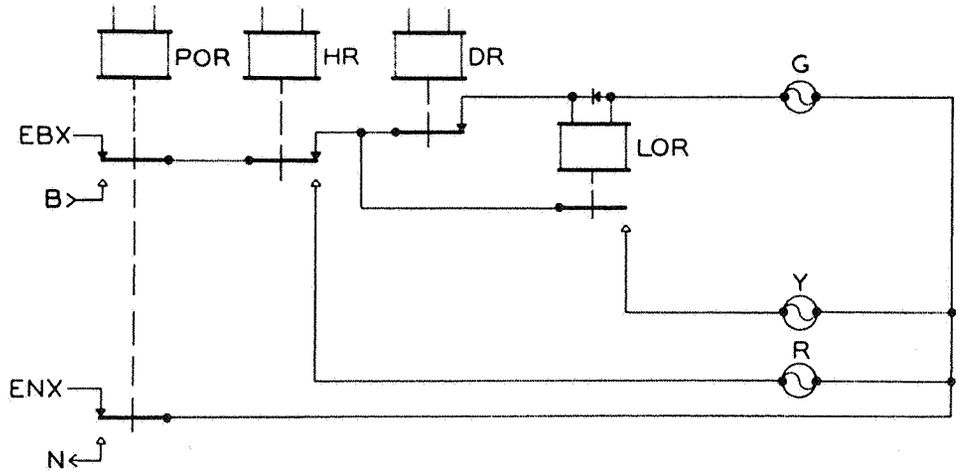

Fig. 39.

A searchlight signal having only one lamp is not generally checked with a light-out relay except with a two-arm signal. In this application, the light-out relay in series with the top arm lamp usually de-energizes both signal mechanisms as shown in Fig. 40. This circuit illustrates a typical application where signal 6L has two arms and signal 23 in approach has one arm.

Signal 6L is approach lighted and the signals are lighted normally from a.c. It is desirable to check the continuity of the lamp filament of 6LA at all times so that a cold filament check is made as well as a hot filament check as shown for the color light signal. This is accomplished by equipping the light-out relay with two separate coils—one low resistance and one high resistance. The low resistance coil, with the rectifier in parallel, is in series with the lamp in a circuit energized over the approach lighting relay, 6LAER, de-energized. The high resistance coil is also in series with this lamp in a circuit energized over the approach lighting relay energized. This latter circuit is always energized from a battery so that no rectifier is needed. The high resistance coil will limit the current to a value which will not illuminate the signal lamp, but the relay will be energized only if the filament is intact.

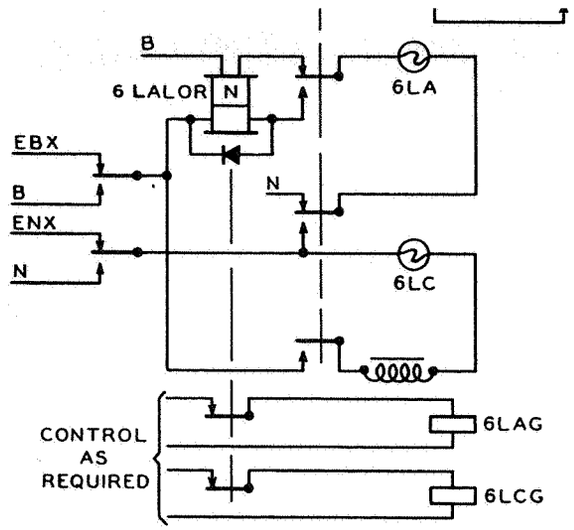

Fig. 40.

As shown in Fig. 40, failure of lamp 6LA at any time will drop light-out relay 6LALOR and open the control circuits of searchlight mechanisms 6LAG and 6LCG. This will prevent the energizing of, or de-energize 6LHDGPR and likewise prevent signal 23G from presenting an aspect less restricting than "Approach" or move it to that aspect if it is in the "Clear" position.

Two-Rate Charge Control Relays

At certain signal locations, such as railroad-highway grade crossing signal installations using gates, or at interlockings where switches are power-operated, the operating battery is subjected to heavy intermittent loads. For example, the normal current drain on a storage battery at a crossing signal installation may not be more than a few milliamperes; however, when the signals and gates are operating the load may be several amperes.

Such variable or heavy intermittent loads make it difficult to maintain a battery in a fully charged condition and yet not overcharge it excessively. To overcome this condition, a two-rate charge control may be used. The two-rate charge control relay used in the battery charging circuit will initiate a high rate of charge when it is actuated by external means, and will transfer from a high-rate to a continuous low-rate charge when the fully charged condition of the battery is approached.

Figure 41 shows typical application circuits for a relay of this type.

It will be noted that the two-rate charge control relay will be de-energized by the opening of a front contact of a line or track relay. The back contact of the charge control relay shunts the adjustable resistor in series with the charging circuit thereby establishing the high rate of charge. The relay is so adjusted that the high-rate charge will continue until voltage of the battery reaches a point slightly under the maximum voltage at which time the charge control relay will pick up and remove the shunt from the adjustable resistor, thereby establishing the low-rate charge.

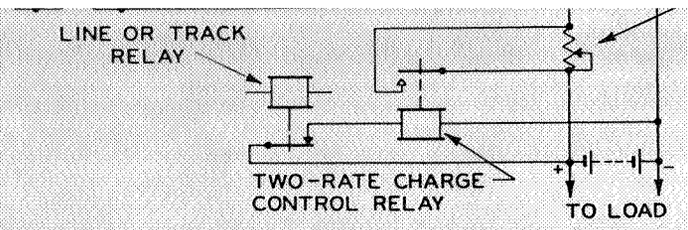

Fig. 41.

Relays are furnished adjusted to pick up on minimum voltage. Each relay must be adjusted to pick up on a voltage determined by the conditions existing at the location where it is to be used. The value of voltage on which the relay picks up is changed by the simple means of changing the magnetic reluctance of the front core which is adjustable.

The high-rate charge should be adjusted with the back contact of the charge control relay closed and the adjustable resistor shunted. The low-rate charge should be adjusted by varying the adjustable resistor while the charge control relay is energized and the back contact open.

Figure 42 shows a typical wiring diagram of a two-rate charge control unit.

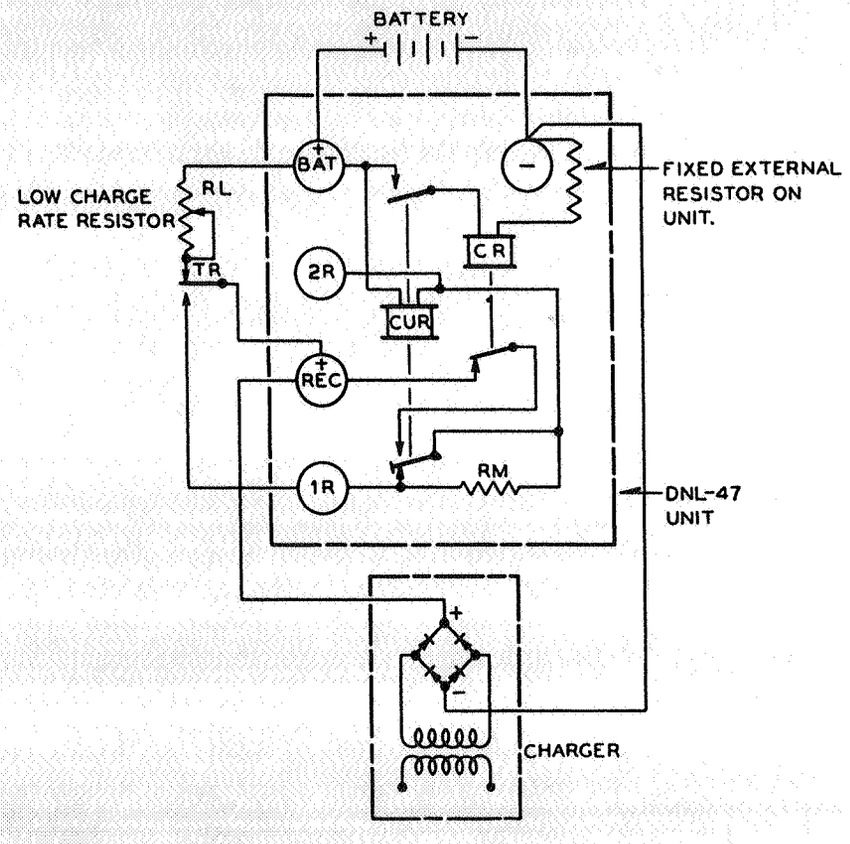

Fig. 42.

contact of track relay TR is still closed, the high charge rate is reduced; however, a temporary low charge rate sufficient to keep relay CUR energized is applied to the battery over the back contact of relay TR, resistor RM, and the coil of relay CUR to positive terminal of the battery. When relay CR picks up, it releases relay CUR which in turn releases relay CR to re-establish the trickle charge rate. If track relay TR picks up before the battery voltage is high enough to pick up relay CR, the high-rate charge is maintained over the back contact of relay CR, front contact and coil of relay CUR, to the positive battery terminal, thereby keeping relay CUR energized. When the battery becomes fully charged, relay CR will pick up. This releases relay CUR which in turn releases relay CR to reduce the charging current to the trickle charge rate. Pick-up of a regular neutral relay increases as temperature increases, while for any given charged condition, battery voltage decreases as the temperature increases. To insure proper regulation of battery charging, both of the two-rate charge control relay units herein described are temperature compensated to take care of the inherent variations in relay pick-up and battery voltage caused by changes in ambient temperature.

Plug-In Type Relays

Plug-in type relays have come into widespread usage chiefly because of quick and easy replacement without disturbing wire connections and because of the considerable savings in space for mounting and housing. Plug-in relays are available for practically all usages which are served by shelf and wall type relays.

One style of plug-in relay is shown in Fig. 43. The relay illustrated is available with six front and six back contacts. Relays of this same style are available that are twice as wide as the relay shown. The double width relays are

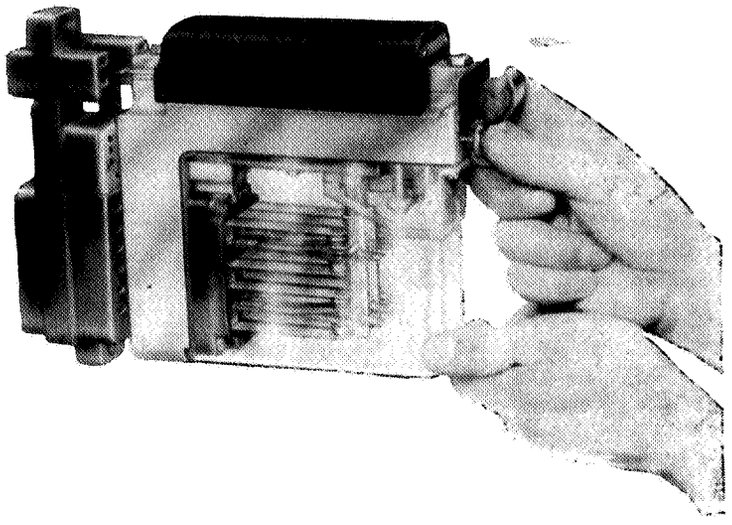

Fig. 43.
Plug-In Relay Being Applied to Its Mounting Base.

framework, contains receptacle springs which receive the relay contact and coil fingers electrically connecting them into the circuits. Figure 44 illustrates the receptacle spring with its reinforcing steel coil spring, and shows the way it lends itself to circuit testing without opening the circuit. The receptacles can be readily removed if necessary to change the circuitry.

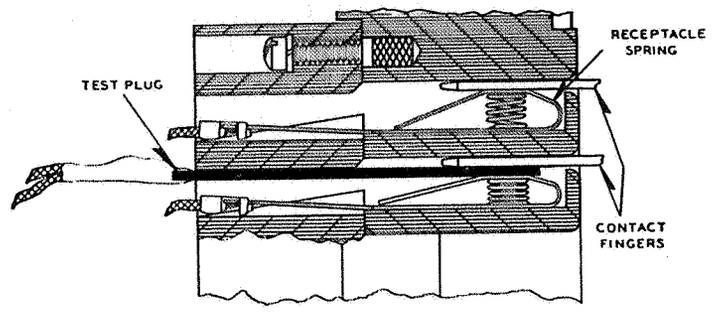

Fig. 44.

The armature on this type of relay is biased by means of a permanent magnet as shown in Fig. 45. This magnet prevents the opening of the back contacts under conditions of severe vibration. With this magnetic biasing the relay will operate on energizing current of one polarity only. The coil can be replaced merely by removing the back strap screws and without disturbing the sealed enclosure containing the armature and contacts.

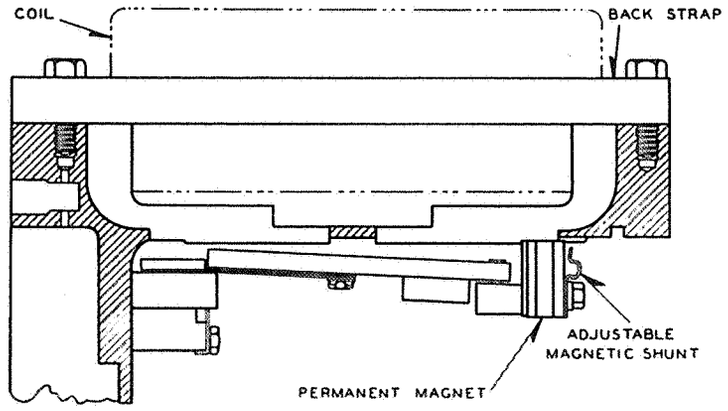

Fig. 45.
Plug-In Relay Magnetic Circuit.

The contact members of this style of plug-in relay are readily replaceable without disturbing any member except the pair which is held in position by the

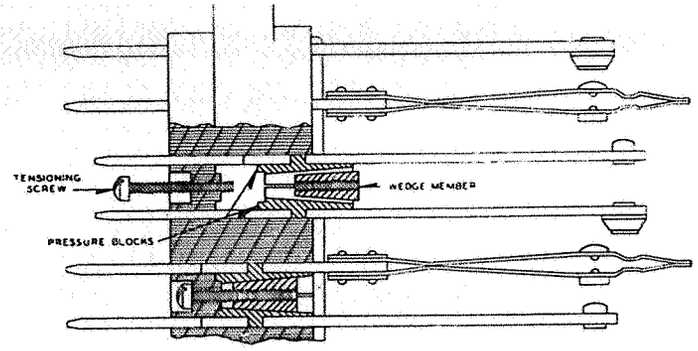

Fig. 46.
Contact Member Clamping Arrangement.

This series of plug-in relays parallels the shelf and wall type relays for practically every usage. There are a few styles, however, which warrant special discussion here.

Figure 47 shows a power transfer relay available with 2 front-2 back and with 4 front-4 back heavy duty contacts. All contacts are silver-to-silver impregnated carbon and can carry up to 15 amperes with voltages up to 30 volts a.c. or d.c. This relay contains a rectifier and calibrating resistor within the contact enclosure. Due to the relationship between the coil, the rectifier and the adjustable resistor, the calibration remains practically constant over a temperature range from minus 40 degrees Fahrenheit to 160 degrees Fahrenheit. This relay provides for adequate low voltage transfer as well as for power outage transfer.

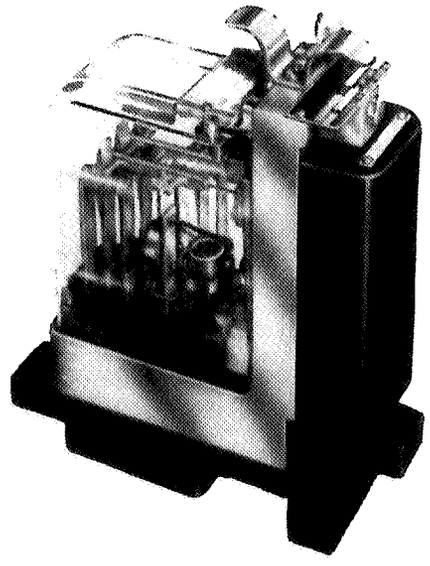

Fig. 47.
Plug-In Power Transfer Relay.

In this series of plug-in relays there is available a three-position d.c. relay which is the equivalent of two oppositely biased plug-in relays. It has two

when no energy is applied. This relay is particularly suited for use in polarized signal control line circuits because it consumes less power than if two separate biased relays were used. This permits the use of longer line circuits with a given battery voltage.

The series of plug-in relays described in the foregoing are later developments of an earlier series of larger plug-in relays which have a maximum equipment of 8 front-8 back dependent contacts, 10 front-2 back independent contacts, or 4 front-4 back dependent and 4 front-2 back independent contacts. The magnetic circuit is similar to that of the relay shown in Fig. 45 and the armature likewise will pick up on only one polarity of energization. A typical single width model of this series of plug-in relays is shown in Fig. 48. This relay requires a special tool for applying it to or removing it from its mounting base.

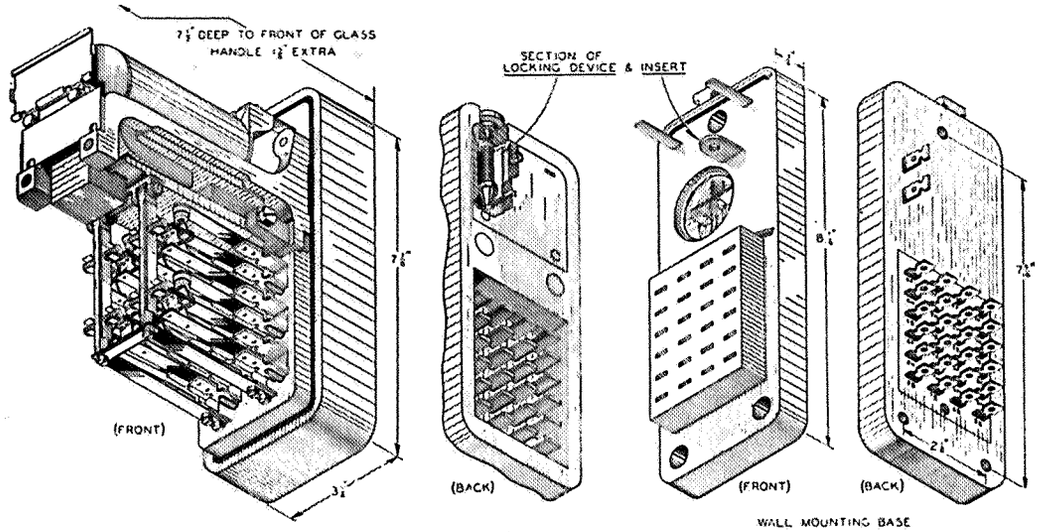

Fig. 48.
Another Type of Plug-In Relay.

Another style of plug-in type relay is made in two sizes, the Size 1 and the Size 2. The Size 2 relay is illustrated in Fig. 49. Two Size 1 relays take the space required for one Size 2 relay. In the Size 1 are the d.c. neutral, biased-

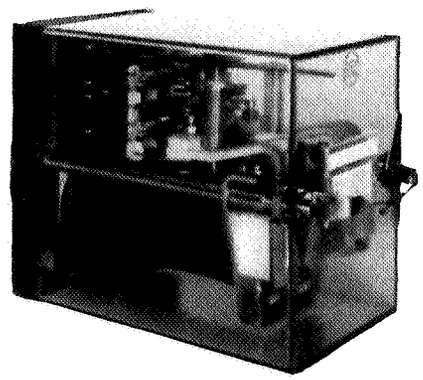

Fig. 49.
Plug-In Type Relay—Size 2.

vertical rows of six springs each; the Size 2 neutral type has a 36-contact spring capacity or six vertical rows of six springs each. The rows of contact springs may be arranged in practically any combination of front-back (F-B) or front or back (F or B).

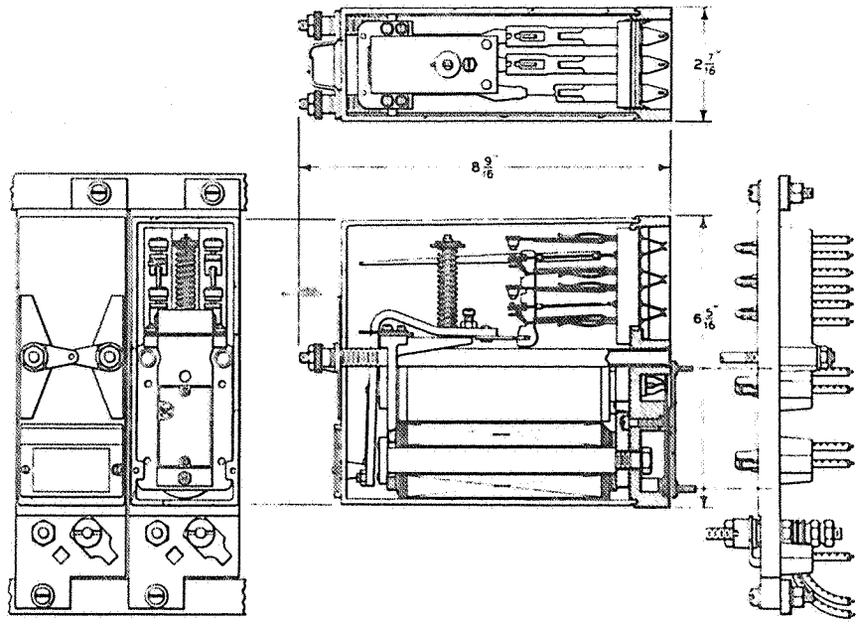

Fig. 50.
Plug-In Type Relay—Size 1.

The most common contact combinations for the Size 1 neutral relay are:

2 FB	4F-2B
4 FB	4FB-2F-1B
6 FB	

The Size 2 neutral relay has 12FB or 8FB-4F-2B contact combinations.

The Size 1 thermal time relay has one normally closed contact and one normally open contact. The Size 2 motor-operated timing relay can be provided with one or two check and time contacts.

Other Size 1 and Size 2 relays for special applications have contact combinations to fit the particular application.

Relay coil combinations.

These plug-in relays are generally equipped with two coils which can be connected either in series, in multiple, or independently.

With various combinations of short-circuited windings, rectifier and resistor shunts, copper washers, and magnetic shunts, a number of different relay characteristics may be obtained, such as:

1. Normal pick-up and drop-away.
2. Quick pick-up and slow drop-away.
3. Slow pick-up and slow drop-away.

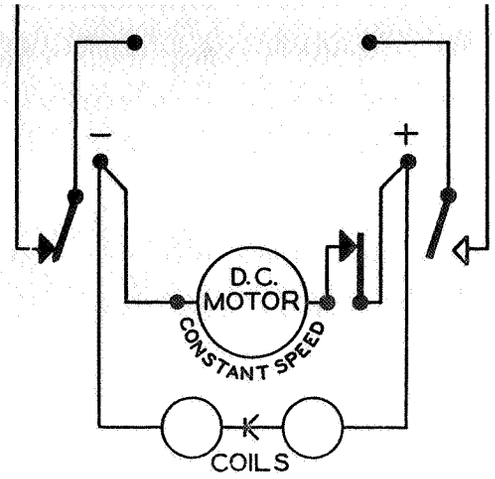

Fig. 51.
Wiring Diagram of Motor-Driven Time Element Relay.

Figure 52 shows the electrical connection between the plugboard mounted on the relay rack and the contact block in the base of the relay. All external wires are soldered to terminals which are inserted in the back of the plugboard. The terminals and wire can be readily removed for making wiring changes. The plugboards are provided with guide rods to assure proper alignment of the relay prongs and the plug portion of the terminals protruding from the plugboard. The relays are held in position by knurled retaining nuts as shown in Fig. 50.

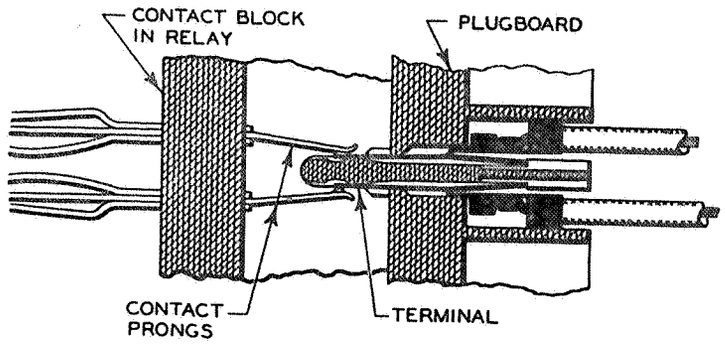

Fig. 52.
Detail of Plug Connection.

A molded transparent cover, which is very tough and difficult to break, protects the working parts of the relay, as shown in Fig. 49.

These relays are provided with test terminals mounted on the plugboards and directly underneath their respective relays. They permit opening the circuit to the relay coil to see that it drops away or picks up properly, or for determining the relay's operating value. One or two test terminals are provided for each relay, depending on whether the relay has one or more independent coils. These test terminals, comprised in part by the round slotted nut

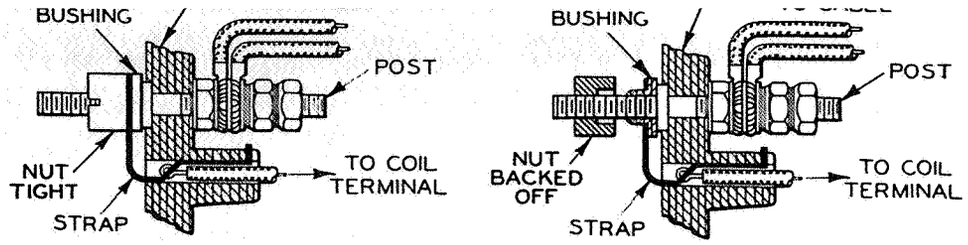

Fig. 53.
Test Terminal for Opening Winding.

Inspections and Tests

Each type of relay has certain standards of electrical values, termed "operating characteristics," at which it will function most effectively. These values are shown on a label affixed to the relay. A relay will not function as intended if used in a circuit not suited to its operating characteristics. For example, a line relay connected to a track circuit would not operate since the electrical values of a track circuit are not suited to the operating characteristics of a line relay. Similarly, if a magnetic or mechanical defect should develop in a relay its operating characteristics will change to a point where it might not be suited to the electrical values of the circuit in which it is used.

For this reason, and since relays play such a vital part in the safe and efficient operation of a signal system, frequent visual inspections and periodic tests are necessary.

Each railroad has its own standards and instructions for testing relays as well as the recording of such tests, which in general follow A.A.R. Signal Section instructions for direct current relays.

QUESTIONS ON

CHAPTER VI

Direct Current Relays

2. Describe the difference between a track relay and a line relay.

3. Describe briefly each of the following relay parts and their function:
   (a) Coil.
   (b) Core.
   (c) Yoke or back strap.
   (d) Pole pieces.
   (e) Armature.

4. What is the most common form of electromagnet used in direct current relays?

5. Why is it necessary that the current in one coil of a relay flow around its core in a direction opposite to that in the other coil?

6. Why is it necessary that a predetermined permanent air gap be maintained between the armature and the pole pieces?

7. Draw the symbol for each, and describe what is meant by the following:
   (a) Independent front contact.
   (b) Independent back contact.
   (c) Dependent front and back contact.

8. What is done to make a neutral relay have a slow pick-up?

9. What is done to make a neutral relay have a quick drop-away?

10. What is done to make a neutral relay have a slow drop-away?

11. Describe briefly the operation of a polarized relay.

12. What is a retained neutral polarized relay?

13. Describe the magnetic structure of a retained neutral polarized relay.

14. What is a time element relay?

15. What are the three general types of time element relays?

16. What prevents the main neutral armature as shown in Fig. 15 from picking up during operation of the relay?

17. What is the purpose of the check contact in a time element relay?

18. What operates the contacts of a thermal type time element relay?

19. Why is it undesirable to use a thermal type relay where repetitive operation is required?

20. Approximately how many operations per minute is a flasher relay designed for highway crossing signals? For wayside signals?

21. How may the rate of operation of a flasher relay be increased or decreased?

22. Referring to Fig. 25, what is the advantage of shunting the lamps alternately rather than opening the circuit to them?

23. What means are used to eliminate radio interference that might be caused by the operation of a flasher relay?

24. What is the purpose of an overload relay?

25. Why will an overload relay not pick up on the initial current surge of the motor?

26. What action is required to release an overload relay once it has been picked up due to a sustained overload?

27. What is a biased relay?

28. Describe how the biased action of a relay is obtained.

29. Describe four uses of a biased relay.

30. What is an interlocking relay?

work with a signal control relay?

36. Describe the operation of a series track relay used for approach lighting purposes.

37. What method is used to insure proper operation of a series track relay for different track circuits having different track circuit conditions?

38. What is the purpose of a light-out relay?

39. What method is used to make a light-out relay operate on either a.c. or d.c.?

40. Name two undesirable conditions that might occur if a light-out relay was not used in the light circuit for color light or searchlight type signals?

41. Why are two-rate charge control relays used?

42. Describe the operation of the two-rate charge control relay illustrated in Fig. 41.

43. Name two important advantages of plug-in type relays.

44. What is meant by the term "operating characteristics" of a relay?

45. Describe the method used in testing a relay for its operating characteristics.