Flow Measurement in Pipes and Ducts

Dr. Harlan H. Bengtson, P.E.

COURSE CONTENT

1. Introduction

This course is about measurement of the flow rate of a fluid flowing under pressure in a closed conduit. The closed conduit is often circular, but also may be square or rectangular (such as a heating duct) or any other shape. The other major category of flow is open channel flow, which is the flow of a liquid with a free surface open to atmospheric pressure. Measurement of the flow rate of a fluid flowing under pressure, is carried out for a variety of purposes, such as billing for water supply to homes or businesses or, for monitoring or process control of a wide variety of industrial processes, which involve flowing fluids. Several categories of pipe flow measurement devices will be described and discussed, including some associated calculations.

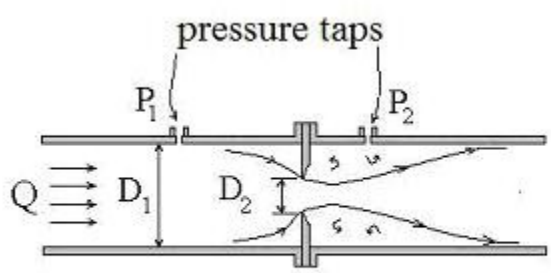

Orifice Meter Parameters

2. Learning Objectives

At the conclusion of this course, the student will

- Be able to calculate flow rate from measured pressure difference, fluid properties, and meter parameters, using the provided equations for venturi, orifice, and flow nozzle meters.

- Be able to determine which type of ISO standard pressure tap locations are being used for a given orifice meter.

- Be able to calculate the orifice coefficient, C_o, for specified orifice and pipe diameters, pressure tap locations and fluid properties.

- Be able to estimate the density of a specified gas at specified temperature and pressure using the Ideal Gas Equation.

- Be able to calculate the velocity of a fluid for given pitot tube reading and fluid density.

- Know the general configuration and principle of operation of rotameters and positive displacement, electromagnetic, target, turbine, vortex, and ultrasonic meters.

- Know recommended applications for each of the type of flow meter discussed in this course.

- Be familiar with the general characteristics of the types of flow meters discussed in this course, as summarized in Table 2 in the course content.

3. Types of Pipe Flow Measurement Devices

The types of pipe flow measuring devices to be discussed in this course are as follows:

i) Differential pressure flow meters

a) Venturi meter
b) Orifice meter
c) Flow nozzle meter

ii) Velocity flow meters – pitot / pitot-static tubes

iii) Variable area flow meters - rotameters

iv) Positive displacement flow meters

v) Miscellaneous

a) Electromagnetic flow meters
b) Target flow meters
d) Turbine flow meters
e) Vortex flow meters
f) Ultrasonic flow meters

4. Differential Pressure Flow meters

Three types of commonly used differential pressure flow meters are the orifice meter, the venturi meter, and the flow nozzle meter. These three all function by introducing a reduced area through which the fluid must flow. The decrease in area causes an increase in velocity, which in turn results in a decrease of pressure. With these flow meters, the pressure difference between the point of maximum velocity (minimum pressure) and the undisturbed upstream flow is measured and can be correlated with flow rate.

Using the principles of conservation of mass (the continuity equation) and the conservation of energy (the energy equation without friction or Bernoulli equation), the following equation can be derived for ideal flow between the upstream, undisturbed flow (subscript 1) and the downstream conditions where the flow area is constricted (subscript 2):

$$Q_{ideal} = A_2 \sqrt{\frac{2(P_1 - P_2)}{\rho(1 - \beta^4)}} \qquad (1)$$

Where: Q_{ideal} = ideal flow rate (neglecting viscosity and other friction effects), cfs

A_2 = constricted cross-sectional area normal to flow, ft^2

P_1 = upstream (undisturbed) pressure in pipe, lb/ft^2

P_2 = pressure in pipe where flow area is constricted to A_2, lb/ft^2

$\beta = D_2/D_1$ = (diam. at A_2)/(pipe diam.)

ρ = fluid density, slugs/ft^3

A discharge coefficient, C, is typically put into equation (1) to account for friction and any other non-ideal factors, giving the following general equation for differential pressure meters:

$$Q = C\, A_2 \sqrt{\frac{2(P_1 - P_2)}{\rho(1 - \beta^4)}} \qquad (2)$$

Where: Q = flow rate through the pipe and meter, cfs

C = discharge coefficient, dimensionless

All other parameters are as defined above

Each of the three types of differential pressure flow meters will now be considered separately.

<u>Venturi Meter:</u> Fluid enters a venturi meter through a converging cone of angle 15° to 20°. It then passes through the throat, which has the minimum cross-sectional area, maximum velocity, and minimum pressure in the meter. The fluid then slows down through a diverging cone of angle 5° to 7°, for the transition back to the full pipe diameter. Figure 1 shows the shape of a typical venturi meter and the parameters defined above as applied to this type of meter. D_2 is the diameter of the throat and P_2 is the pressure at the throat. D_1 and P_1 are in the pipe before entering the converging portion of the meter.

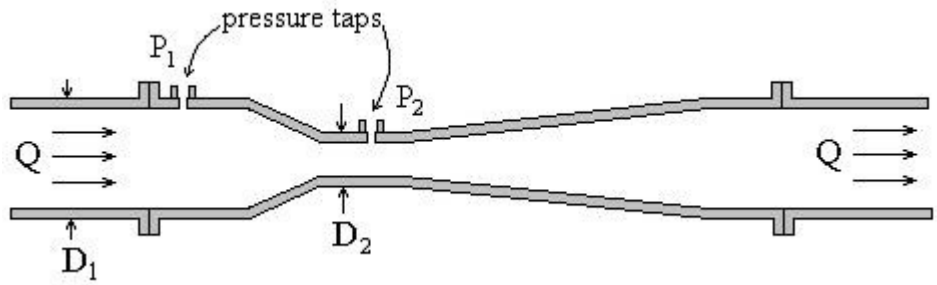

Figure 1. Venturi Meter Parameters

Due to the smooth transition to the throat and gradual transition back to full pipe diameter, the head loss through a venturi meter is quite low and the discharge coefficient is quite high. For a venturi meter the discharge coefficient is typically called the venturi coefficient, C_v, giving the following equation for a venturi meter:

$$Q = C_v A_2 \sqrt{\frac{2(P_1 - P_2)}{\rho(1 - \beta^4)}} \qquad (3)$$

The value of the venturi coefficient, C_v, will typically range from 0.95 to nearly one. In ISO 5167 (ISO 5167-1:2003 – see reference #2 for this course), C_v is given as 0.995 for cast iron or machined venturi meters and 0.985 for welded sheet metal venturi meters meeting ISO specifications, all for Reynold's Number between 2×10^5 and 10^6. Information on the venturi coefficient will typically be provided by venturi meter manufacturers.

Example #1: Water at 50° F is flowing through a venturi meter with a 2 inch throat diameter, in a 4 inch diameter pipe. Per manufacturer's information, Cv = 0.99 for this meter under these flow conditions. What is the flow rate through the meter if the pressure difference, $P_1 - P_2$, is measured as 8 inches of Hg.

Solution: The density of water in the temperature range from 32° to 70°F is 1.94 slugs/ft^3, to three significant figures, so that value will be used here. $A_2 = \pi D_2^2/4 = \pi(2/12)^2/4 = 0.02182$ ft^2. $\beta = 2/4 = 0.5$. Converting the pressure difference to lb/ft^2: $P_1 - P_2 = (8 \text{ in Hg})(70.73 \text{ lb/ft}^2/\text{in Hg}) = 565.8$ lb/ft^2. Substituting all of these values into equation (3):

$$Q = (0.99)(0.02182)\sqrt{\frac{2\ (565.8)}{(1.94)(1 - 0.5^4)}} = \underline{\mathbf{0.5923\ cfs}}$$

<u>Orifice Meter:</u> The orifice meter is the simplest of the three differential pressure flow meters. It consists of a circular plate with a hole in the middle, typically held in place between pipe flanges, as shown in figure 2.

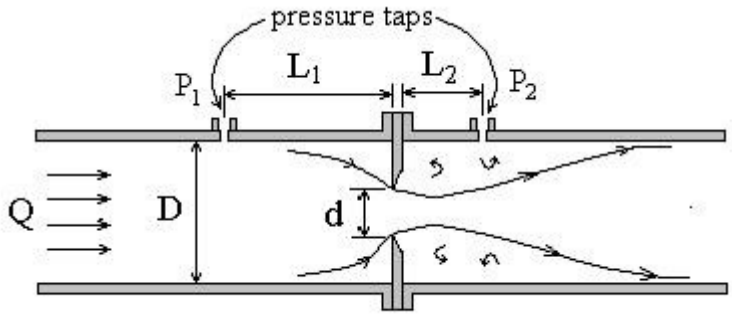

Figure 2. Orifice Meter Parameters

For an orifice meter, the diameter of the orifice, d, is used for D_2 (giving $A_2 = A_o$), and the discharge coefficient is typically called an orifice coefficient, C_o, giving the following equation for an orifice meter:

$$Q = C_o A_o \sqrt{\frac{2(P_1 - P_2)}{\rho(1 - \beta^4)}} \qquad (4)$$

The preferred locations of the pressure taps for an orifice meter have undergone change over time. Previously the downstream pressure tap was preferentially located at the vena-contracta, the minimum jet area, which occurs downstream of the orifice plate, as shown in Figure 2. For a vena-contracta tap, the tap location depended upon the orifice hole size. This link between the tap location and the orifice size made it difficult to change orifice plates with different hole sizes in a given meter in order to alter the range of measurement. In 1991, the ISO-5167 international standard came out, in which three types of differential measuring taps were identified for orifice meters, as illustrated in Figure 3 below. In

ISO-5167, the distance of the pressure taps from the orifice plate is specified as a fixed distance or as a function of the pipe diameter, rather than the orifice diameter as shown in Figure 3.

In ISO-5167, an equation for the orifice coefficient, C_o, is given as a function of β, Reynolds Number, and L_1 & L_2, the distances of the pressure taps from the orifice plate, as shown in Figures 2 and 3. This equation, given in the next paragraph can be used for an orifice meter with any of the three standard pressure tap configurations.

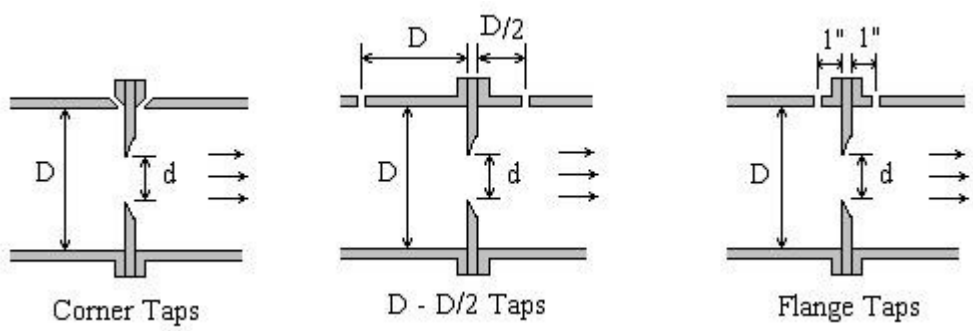

Figure 3. ISO standard orifice meter pressure tap locations

The ISO-5167 equation for C_o , (also available in reference #3 for this course, U.S. Dept. of the Interior, Bureau of Reclamation, *Water Measurement Manual*), is as follows:

$$C_o = 0.5959 + 0.0312\,\beta^{2.1} - 0.1840\,\beta^{8} + 0.0029\,\beta^{2.5}(10^6/Re)^{0.75} + 0.0900(L_1/D)[\beta^4/(1-\beta^4)] - 0.0337\,(L_2/D)\,\beta^3 \qquad (5)$$

Where: C_o = orifice coefficient, as defined in equation (4), dimensionless

L_1 = pressure tap distance from upstream face of the plate, inches

L_2 = pressure tap distance from downstream face of the plate, inches

D = pipe diameter, inches

β = ratio of orifice diameter to pipe diameter = d/D, dimensionless

Re = Reynolds number = DV/ν = $DV\rho/\mu$, dimensionless (D in ft)

V = average velocity of fluid in pipe = $Q/(\pi D^2/4)$, ft/sec (D in ft)

ν = kinematic viscosity of the flowing fluid, ft^2/sec

ρ = density of the flowing fluid, $slugs/ft^3$

μ = dynamic viscosity of the flowing fluid, $lb\text{-}sec/ft^2$

As shown in Figure 3: $L_1 = L_2 = 0$ for corner taps; $L_1 = L_2 = 1$ inch for flange taps; and $L_1 = D$ & $L_2 = D/2$ for D – D/2 taps. Equation (5) is not intended for use with any other arbitrary values for L_1 and L_2.

There are minimum allowable values of Reynolds number for use of equation (5) as follows. For flange taps and (D – D/2) taps, Reynolds number must be greater than $1260\beta^2D$. For corner taps, Reynolds number must be greater than 10,000 if β is greater than 0.45 and Reynolds number must be greater than 5000 if β is less than 0.45.

Fluid properties (ν or ρ & μ) are needed in order to use equation (5). Tables or graphs with values of ν, ρ, and μ for water and other fluids over a range of

temperatures are available in many handbooks and fluid mechanics or thermodynamics textbooks, as for example, in reference #1 for this course. Table 1 shows density and viscosity for water at temperatures from 32° F to 70° F.

Table 1. Density and Viscosity of Water

Temperature, °F	Density, slugs/ft^3	Dynamic Viscosity, lb-s/ft^2	Kinematic Viscosity, ft^2/sec
32	1.94	3.732×10^{-5}	1.924×10^{-5}
40	1.94	3.228×10^{-5}	1.664×10^{-5}
50	1.94	2.730×10^{-5}	1.407×10^{-5}
60	1.938	2.334×10^{-5}	1.204×10^{-5}
70	1.936	2.037×10^{-5}	1.052×10^{-5}

Example #2: What is the Reynolds number for water at 50°F, flowing at 0.35 cfs through a 4 inch diameter pipe?

Solution: Calculate V from $V = Q/A = Q/(\pi D^2/4) = 0.35/[\pi(4/12)^2/4] = 4.01$ ft/s. From Table 1: $\nu = 1.407 \times 10^{-5}$ ft^2/s. From the problem statement: D = 4/12 ft. Substituting into the expression for Re: $Re = (4/12)(4.01)/(1.407 \times 10^{-5})$

$$\underline{\mathbf{Re = 9.50 \times 10^4}}$$

Example #3: Use equation (5) to calculate C_o for orifice diameters of 0.8, 1.6, 2.0, 2.4, & 2.8 inches, each in a 4 inch diameter pipe, with Re = 10^5, for each of the standard pressure tap configurations: i) D – D/2 taps, ii) flange taps, and iii) corner taps.

Solution: Making all of these calculations by hand using equation (5) would be rather tedious, but once the equation is set up in an Excel spreadsheet, the repetitive calculations are easily done. Following is a copy of the Excel spreadsheet solution to this problem.

D - D/2 Taps:

D, in	d, in	L_1, in	L_2, in	β	Re	C_o
4	0.8	4	2	0.2	100000	**0.59726**
4	1.6	4	2	0.4	100000	**0.60327**
4	2	4	2	0.5	100000	**0.60924**
4	2.4	4	2	0.6	100000	**0.61779**
4	2.8	4	2	0.7	100000	**0.62939**

Flange Taps:

D, in	d, in	L_1, in	L_2, in	β	Re	C_o
4	0.8	1	1	0.2	100000	**0.59722**
4	1.6	1	1	0.4	100000	**0.60204**
4	2	1	1	0.5	100000	**0.60579**
4	2.4	1	1	0.6	100000	**0.60956**
4	2.8	1	1	0.7	100000	**0.61095**

Corner Taps:

D, in	d, in	L_1, in	L_2, in	β	Re	C_o
4	0.8	0	0	0.2	100000	**0.59725**
4	1.6	0	0	0.4	100000	**0.60198**
4	2	0	0	0.5	100000	**0.60534**
4	2.4	0	0	0.6	100000	**0.60803**
4	2.8	0	0	0.7	100000	**0.60673**

Note that C_o is between 0.597 and 0.63 for all three pressure tap configurations for Re = 10^5 and β between 0.2 and 0.7. For larger values of Reynolds number C_o will stay within this range. For smaller values of Reynolds number, C_o will get somewhat larger, especially for higher values of β.

Example #4: Water at 50° F is flowing through an orifice meter with flange taps and a 2 inch throat diameter, in a 4 inch diameter pipe. What is the flow rate through the meter if the pressure difference, $P_1 - P_2$, is measured as 8 inches of Hg.

Solution: Assume Re is approximately 10^5, in order to get started. Then from the solution to **Example #3**, with $\beta = 0.5$: $C_o = 0.60579$.

From Table 1, the density of water at 50°F is 1.94 slugs/ft^3. $A_2 = \pi D_2^2/4 = \pi(2/12)^2/4 = 0.02182$ ft^2. $\beta = 2/4 = 0.5$. Converting the pressure difference to lb/ft^2: $P_1 - P_2 = (8 \text{ in Hg})(70.73 \text{ lb/ft}^2/\text{in Hg}) = 565.8$ lb/ft^2. Substituting all of these values into equation (4):

$$Q = (0.60579)(0.02182)\sqrt{\frac{2\ (565.8)}{(1.94)(1 - 0.5^4)}} = \underline{\mathbf{0.3624\ cfs}}$$

Check on Reynolds number value:

$$V = Q/A = 0.3624/[\pi(4/12)^2/4] = 4.152 \text{ ft/sec}$$

$$Re = DV/\nu = (4/12)(4.152)/(1.407 \times 10^{-5}) = 9.836 \times 10^4$$

This value is close enough to 10^5, so that the value used for C_o is ok.

<u>Flow Nozzle Meter:</u> The flow nozzle meter is simpler and less expensive than a venturi meter, but not quite as simple as an orifice meter. It consists of a relatively short nozzle, typically held in place between pipe flanges, as shown in Figure 4.

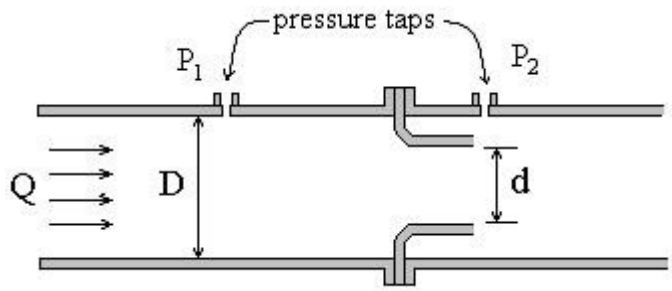

Figure 4. Flow Nozzle Meter Parameters

For a flow nozzle meter, the exit diameter of the nozzle, d, is used for D_2 (giving $A_2 = A_n$), and the discharge coefficient is typically called a nozzle coefficient, C_n, giving the following equation for a flow nozzle meter:

$$Q = C_n A_n \sqrt{\frac{2(P_1 - P_2)}{\rho(1 - \beta^4)}} \qquad (6)$$

Due to the smoother contraction of the flow, flow nozzle coefficients are significantly higher than orifice coefficients. They are not, however as high as venturi coefficients. Flow nozzle coefficients are typically in the range from 0.94 to 0.99. There are several different standard flow nozzle designs. Information on pressure tap placement and calibration should be provided by the meter manufacturer.

For Excel spreadsheets to make orifice and venturi meter calculations see http://www.engineeringexceltemplates.com/.

5. Velocity Flow Meters – Pitot / Pitot-Static Tubes

Pitot tubes (also called pitot-static tubes) are an inexpensive, convenient way to measure velocity at a point in a fluid. They are used widely in airflow measurements in ventilation and HVAC applications. Definitions for three types of pressure or pressure measurement are given below, because understanding them helps to understand the pitot tube equation. Static pressure, dynamic pressure and total pressure are defined below and illustrated in figure 5.

Static pressure is the fluid pressure relative to surrounding atmospheric pressure, measured through a flat opening, which is in parallel with the fluid flow, as shown with the first U-tube manometer in Figure 5.

Stagnation pressure is the fluid pressure relative to the surrounding atmospheric pressure, measured through a flat opening, which is perpendicular to and facing into the direction of fluid flow, as shown with the second U-tube manometer in Figure 5. This is also sometimes called the total pressure.

Dynamic pressure is the fluid pressure relative to the static pressure, measured through a flat opening, which is perpendicular to and facing into the direction of fluid flow, as shown with the third U-tube manometer in Figure 5. This is also sometimes called the velocity pressure.

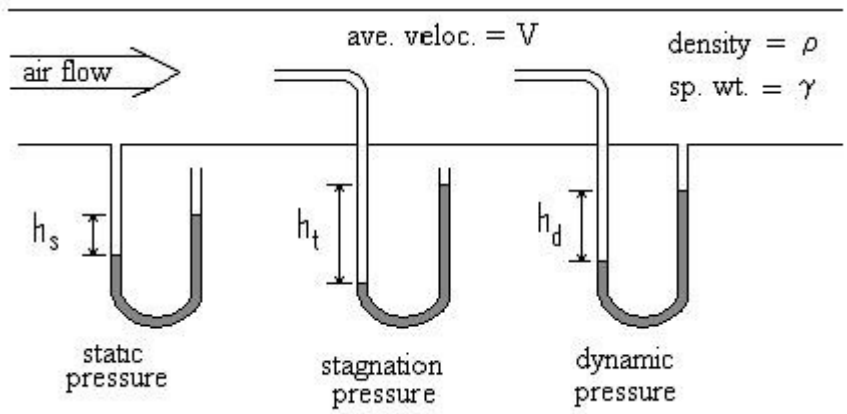

Figure 5. Various Pressure Measurements

Static pressure is typically represented by the symbol, p. Dynamic pressure is equal to ½ ρV^2. Stagnation pressure, represented here by P_{stag}, is equal to static pressure plus dynamic pressure plus the pressure due to the height of the measuring point above some reference plane, as shown in the following equation.

$$P_{stag} = P + \frac{1}{2}\rho V^2 + \gamma h \qquad (7)$$

Where the parameters with a consistent set of units are as follows:

P_{stag} = stagnation pressure, lb/ft^2

P = static pressure, lb/ft^2

ρ = density of fluid, slugs/ft^3

γ = specific weight of fluid, lb/ft^3

h = height above a specified reference plane, ft

V = average velocity of fluid, ft/sec

(V = Q/A = volumetric flow rate/cross-sectional area normal to flow)

For pitot tube measurements, the reference plane can be taken at the height of the pitot tube measurement, so that h =0. Then stagnation pressure minus static pressure is equal to dynamic pressure, or:

$$P_{stag} - P = \frac{1}{2}\rho V^2 \qquad (8)$$

The pressure difference, $P_{stag} - P$, can be measured directly with a pitot tube such as the third U-tube in Figure 5, or more simply with a pitot tube like the one shown in Figure 6, which has two concentric tubes. The inner tube has a stagnation pressure opening and the outer tube has a static pressure opening parallel to the fluid flow direction. The pressure difference is equal to the dynamic pressure ($\frac{1}{2}\rho V^2$) and can be used to calculate the fluid velocity for known fluid density, ρ. A consistent set of units is: pressure in lb/ft^2, density in $slugs/ft^3$, and velocity in ft/sec.

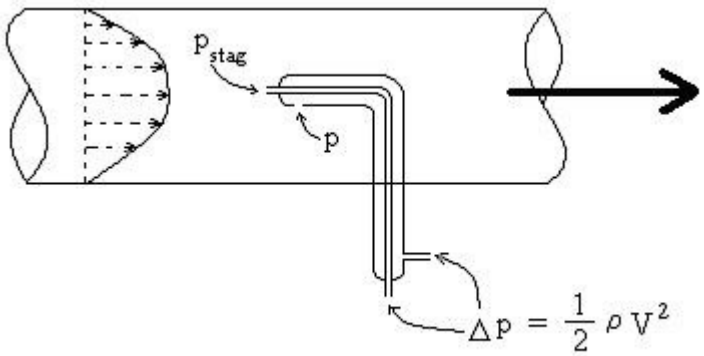

Figure 6. Pitot Tube

For use with a pitot tube, equation (8) will typically be used to calculate the velocity of the fluid. Setting ($P_{stag} - P$) = ΔP, and solving for V, gives the following equation:

$$V = \sqrt{\frac{2\ \Delta P}{\rho}} \qquad (9)$$

In order to use Equation (9) to calculate fluid velocity from pitot tube measurements, it is necessary to be able to obtain a value of density for the flowing fluid at its temperature and pressure. For a liquid, a value for density can typically be obtained from a table similar to Table 1 in this course. Such tables are available in handbooks and fluid mechanics or thermodynamics textbooks. Pitot tubes are used more commonly to measure gas flow, as for example, air flow in HVAC ducts, and density of a gas varies considerably with both

temperature and pressure. A convenient way to obtain a value of density for a gas at known temperature and pressure is through the use of the Ideal Gas Law.

The Ideal Gas Law, as used to calculate density of a gas is as follows:

$$\rho = (MW)\left(\frac{P}{R\,T}\right) \qquad (10)$$

Where: ρ = density of the gas at pressure, P, & temperature, T, slugs/ft^3

MW = molecular weight of the gas, slugs/slug-mole (The average molecular weight typically used for air is 29.)

P = absolute pressure of the gas, psia

T = absolute temperature of the gas, ^{o}R (^{o}F + 459.67 = ^{o}R)

R = Ideal Gas Law constant, 345.23 psia-ft^3/slug-mole-^{o}R

But, you may ask, this is the <u>Ideal Gas Law</u>, so how can we use it to find the density of <u>real</u> gases? Well …. the Ideal Gas Law is a very good approximation for many real gases over a wide range of temperatures and pressures. It does not work well for very high pressures or very low temperatures (approaching the critical temperature and/or critical pressure for the gas), but for many practical, real situations, the Ideal Gas Law gives quite accurate values for density of a gas.

Example #5: Estimate the density of air at 16 psia and 85 ^oF.

Solution: Convert 85 ^oF to ^oR: 85 ^oF = 85 + 459.67 ^oR = 544.67 ^oR

Substituting values for P, T, R, & MW into Equation 11 gives:

$$\rho = (29)[16/(345.23)(544.67)] = \underline{\mathbf{0.002468\ slugs/ft^3}}$$

Example #6: A pitot tube is being used to measure air velocity in a heating duct. The air is at 85 ^oF and 16 psia. The pitot tube registers a pressure difference of 0.22 inches of water ($P_{stag} - P$). What is the velocity of the air at that point in the duct?

Solution: Convert 0.023 inches of water to lb/ft^2 (psf) (conversion factor is: 5.204 psf/in of water):

$$0.023 \text{ in of water} = (0.023)(5.204) \text{ psf} = 0.1197 \text{ psf}$$

Air density at the given P & T is 0.002468 $slugs/ft^3$ from Example #5.

Substituting into equation (9), to calculate the velocity, gives:

$$V = \sqrt{\frac{2(0.1197)}{0.002468}} = \underline{\mathbf{9.85\ ft.sec}}$$

6. Variable Area Flow Meter - Rotameters

A rotameter is a 'variable area' flow meter. It consists of a tapered glass or plastic tube with a float that moves upward to an equilibrium position determined by the flow rate of fluid going through the meter. For greater flow rate, a larger cross-sectional area is needed for the flow, so the float is moved upward until the upward force on it by the fluid is equal to the force of gravity pulling it down. Note that the 'float' must have a density greater than the fluid, or it would simply float to the top of the fluid. Given below, in figure 7, are a schematic diagram of a rotameter and a picture of a typical rotameter.

The height of the float as measured by a graduated scale on the side of the rotameter can be calibrated for flow rate of the fluid being measured in appropriate flow units. A few points regarding rotameters follow:

- Because of the key role of gravity, rotameters must be installed vertically
- Typical turndown ratio is 10:1, that is flow rates as low as 1/10 of the maximum reading can be accurately measured.
- Accuracy as good as 1% of full scale reading can be expected.
- Rotameters do not require power, so they are safer to use with flammable fluids, than an instrument using power, which would need to be explosion proof.
- A rotameter causes little pressure drop.
- It is difficult to apply machine reading and continuous recording with a rotameter.

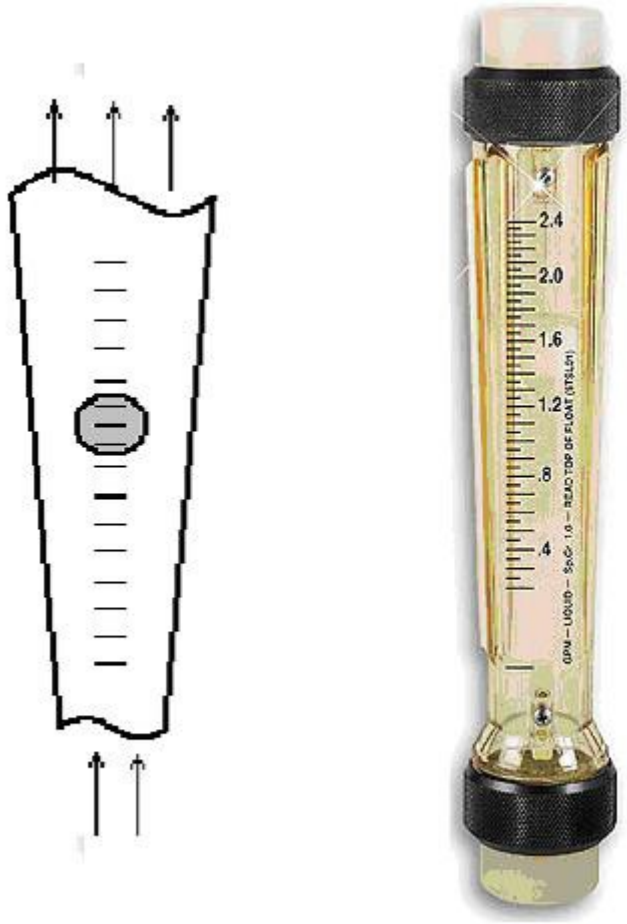

Figure 7. Rotameter Schematic diagram and typical example

7. Positive Displacement Flow Meters

Positive displacement flow meters are often used in residential and small commercial applications. They are very accurate at low to moderate flow rates, which are typical of these applications. There are several types of positive displacement meters, such as reciprocating piston, nutating disk, oval gear, and rotary vane. In all of them, the water passing through the meter, physically

displaces a known volume of fluid for each rotation of the moving measuring element. The number of rotations is counted electronically or magnetically and converted to the volume which has passed through the meter and/or flow rate.

Positive displacement meters can be used for any relatively nonabrasive fluid, such as heating oils, Freon, printing ink, or polymer additives. The accuracy is very good, approximately 0.1% of full flow rate with a turndown of 70:1 or more.

On the other hand, positive displacement flow meters are expensive compared to many other types of meters and produce the highest pressure drop of any flow meter type.

8. Miscellaneous Types of Flow meters

In this section several more types of flow meters for use with pipe flow will each be described and discussed briefly.

a) Electromagnetic flow meters

An electromagnetic flow meter (also called 'magnetic meter' or 'mag meter') measures flow rate by measuring the voltage generated by a conductive fluid passing through a magnetic field. The magnetic field is created by coils outside the flow tube, carrying electrical current. The generated voltage is proportional to the flow rate of the conductive fluid passing through the flow tube. An external sensor measures the generated voltage and converts it to flow rate.

In order to be measured by an electromagnetic flow meter, the fluid must have a conductivity of at least 5 μs/cm. Thus, this type of meter will not work for distilled or deionized water or for most non-aqueous liquids. It works well for

water, which has not been distilled or deionized and many aqueous solutions. Since there is no internal sensor to get fouled, an electromagnetic flow meter is quite suitable for wastewater, other dirty liquids, corrosive liquids or slurries. Since there is no constriction or obstruction to the flow through an electromagnetic meter, it creates negligible pressure drop. It does, however, have a relatively high power consumption, in comparison with other types of flow meters.

b) Target flow meters

With a target flow meter, a physical target (disk) is placed directly in the path of the fluid flow. The target will be deflected due to the force of the fluid striking it, and the greater the fluid flow rate, the greater the deflection will be. The deflection is measured by a sensor mounted on the pipe and calibrated to flow rate for a given fluid. Figure 8 shows a diagram of a target flow meter.

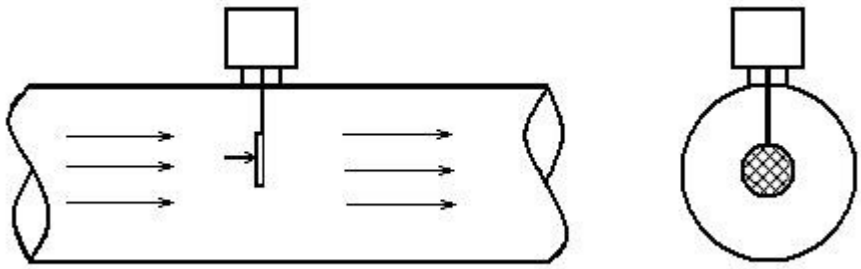

Figure 8. Target Flow Meter

A target flow meter can be used for a wide variety of liquids or gases and there are no moving parts to wear out. They typically have a turndown of 10:1 to 15:1.

c) Turbine flow meters

A turbine flow meter operates on the principle that a fluid flowing past the blades of a turbine will cause it to rotate. Increasing flow rate will cause increasing rate of rotation for the turbine. The meter thus consists of a turbine placed in the path of flow and means of measuring the rate of rotation of the turbine. The turbine's rotational rate can then be calibrated to flow rate. The turbine meter has one of the higher turndown ratios, typically 20:1 or more. Its accuracy is also among the highest at about $\pm$ 0.25%.

d) Vortex flow meters

An obstruction in the path of a flowing fluid will create vortices in the downstream flow if the fluid flow speed is above a critical value. A vortex flow meter (also known as vortex shedding or oscillatory flow meter), measures the vibrations of the downstream vortices caused by a barrier in the flow path, as illustrated in figure 9. The vibrating frequency of the downstream vortices will increase with increasing flow rate, and can thus be calibrated to flow rate of the fluid.

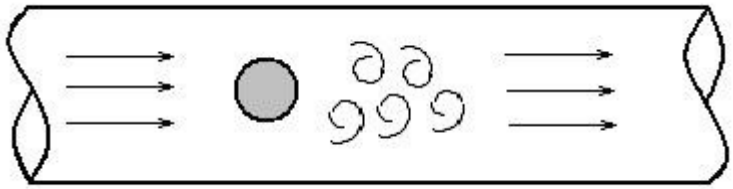

Figure 9. Vortex Flow Meter

e) Ultrasonic flow meters

The two major types of ultrasonic flow meters are 'Doppler' and 'transit-time' ultrasonic meters. Both use ultrasonic waves (frequency > 20 kHz). Both types also use two transducers which transmit and/or receive the ultrasonic waves.

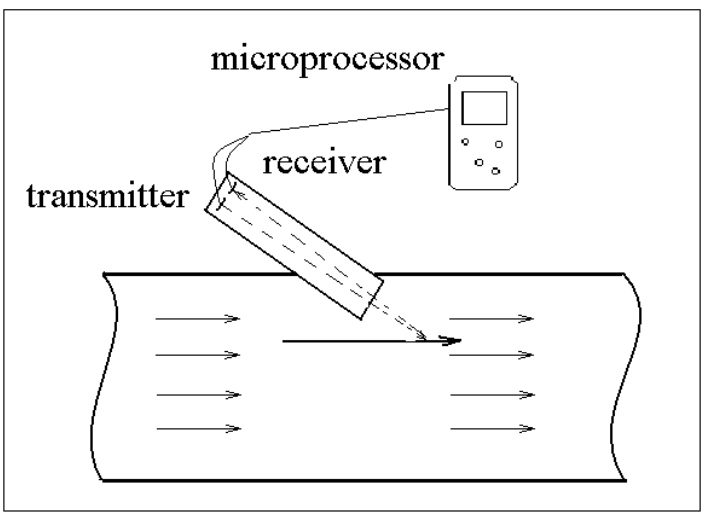

Figure 10. Doppler Ultrasonic Flowmeter

For the Doppler ultrasonic meter, one transducer transmits the ultrasonic waves and the other receives the waves. The fluid must have material in it that will reflect sonic waves, such as particles or entrained air. The frequency of the transmitted beam of ultrasonic waves will be altered, by being reflected from the particles or air bubbles. The resulting frequency shift is measured by the

receiving transducer, and is proportional to the flow rate through the meter. A signal can thus be generated from the receiving transducer, which is proportional to flow rate.

Transit-time ultrasonic meters, also known as 'time-of-travel' meters, measure the difference in travel time between pulses transmitted in the direction of flow and pulses transmitted against the flow. The two transducers are mounted so that one is upstream of the other. Both transducers serve alternately as transmitter and receiver. The upstream transducer will transmit a pulse, which is detected by the downstream transducer, acting as a receiver, giving a 'transit-time' in the direction of flow. The downstream transducer will then transmit a pulse, which is detected by the upstream transducer (acting as a receiver), to give a 'transit-time' against the flow. The difference between the upstream and downstream transit times can be correlated to flow rate through the meter.

The components of a transit-time ultrasonic flow meter are shown in figure 10. One of the options with this type of meter is a rail-mounted set of transducers, which can be clamped onto an existing pipe without taking the pipe apart to mount the meter. It could be used in this way to check on or calibrate an existing meter, or as a permanent installation for flow measurement. Ultrasonic flow meters are also available with transducers permanently mounted on an insert that is mounted in the pipeline, much like other flow meters, such as an electromagnetic flow meter.

Like the electromagnetic flow meter, ultrasonic meters have no sensors inside the pipe nor any constrictions or obstructions in the pipe, so they are suitable for dirty or corrosive liquids or slurries. Also, they cause negligible pressure drop.

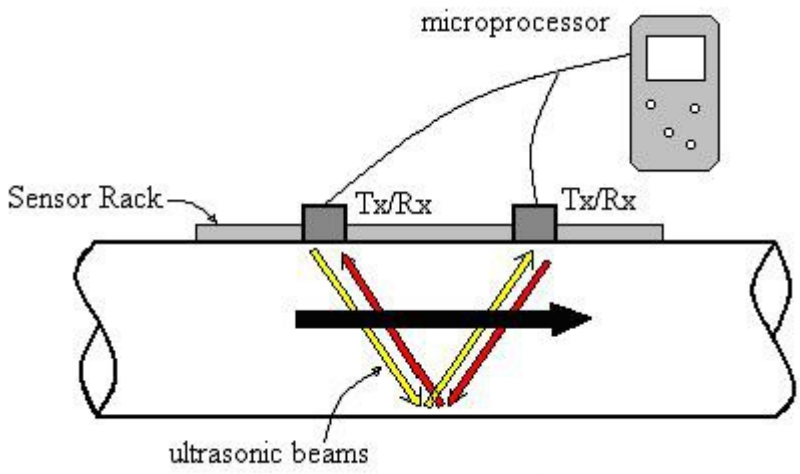

Figure 11. Transit-time Ultrasonic Flow Meter

9. Comparison of Flow Meter Alternatives

Table 2 shows a summary of several useful characteristics of the different types of pipe flow meters described and discussed in this course. The information in Table 2 was extracted from a similar table at the Omega Engineering web site: http://www.omega.com/techref/table1.html . The flow meter characteristics summarized in Table 2 are: recommended applications, typical turndown ratio (also called rangeability), pressure drop, typical accuracy, upstream pipe diameters (required upstream straight pipe length), effect of viscosity, and relative cost.

Table 2. Summary of Flow Meter Characteristics

Flowmeter Type	Recomm. Application	Typical Turndown Ratio	Pressure Drop	Typical Accuracy %	Upstream Pipe Diameters	Effect of Viscosity	Relative Cost
Orifice	clean liquids gases	4:1	medium	± 2 - ± 4 of full scale	10 - 30	high	low
Venturi	clean liquids gases	4:1	low	± 1 of full scale	5 - 20	high	medium
Flow Nozzle	clean liquids gases	4:1	low to medium	± 1 - ± 2 of full scale	10 - 30	high	medium
Pitot Tube	clean liquids gases	3:1	very low	+ 3 - + 5 of full scale	20 - 30	low	low
Rotameter	clean, dirty liq. & gases	10:1	medium	+ 1 - + 10 of full scale	none	medium	low
Positive Displacemt.	clean liquids gases	10:1	high	+ 0.5 of flow rate	none	high	medium
Electro-magnetic	clean, dirty conductive liq. & slurries	40:1	none	+ 0.5 of flow rate	5	none	high
Target	clean, dirty liquids, & slurries	10:1	medium	± 1 - ± 5 of full scale	10 - 30	medium	medium
Turbine	clean liquids gases	20:1	high	+ 0.25 of flow rate	5 - 10	high	high
Vortex	clean, dirty liq. & gases	10:1	medium	+ 1 of flow rate	10 - 20	medium	high
Ultrasonic (Doppler)	dirty liquids & slurries	10:1	none	+ 5 of full scale	5 - 30	none	high
Ultrasonic (transit-time)	clean liquids gases	20:1	none	+ 1 - + 5 of full scale	5 - 30	none	high

10. Summary

There are a wide variety of meter types for measuring flow rate in closed conduits. Twelve of those types were described and discussed in this course. Table 2 in section 8, summarizes a comparison among those twelve types of flow meters.

11. References

1. Bengtson, H.H., "Excel Spreadsheets for Orifice and Venturi Flow Meters," an online article at www.engineeringexcelspreadsheets.com

2. Munson, B. R., Young, D. F., & Okiishi, T. H., *Fundamentals of Fluid Mechanics,* 4th Ed., New York: John Wiley and Sons, Inc, 2002.

3. International Organization of Standards - ISO 5167-1:2003 Measurement of fluid flow by means of pressure differential devices, Part 1: Orifice plates, nozzles, and Venturi tubes inserted in circular cross-section conduits running full. Reference number: ISO 5167-1:2003.

4. U.S. Dept. of the Interior, Bureau of Reclamation, 2001 revised, 1997 third edition, *Water Measurement Manual*, available for on-line use or download at: http://www.usbr.gov/pmts/hydraulics_lab/pubs/wmm/index.htm

5. LMNO Engineering, Research and Software, Ltd website. Contains equations and graphs for flow measurement with venturi, orifice and flow nozzle flowmeters. http://www.lmnoeng.com/venturi.htm

6. Engineering Toolbox website. Contains information on flow measurement with a variety of meter types. http://www.engineeringtoolbox.com/fluid-flow-meters-t_49.html